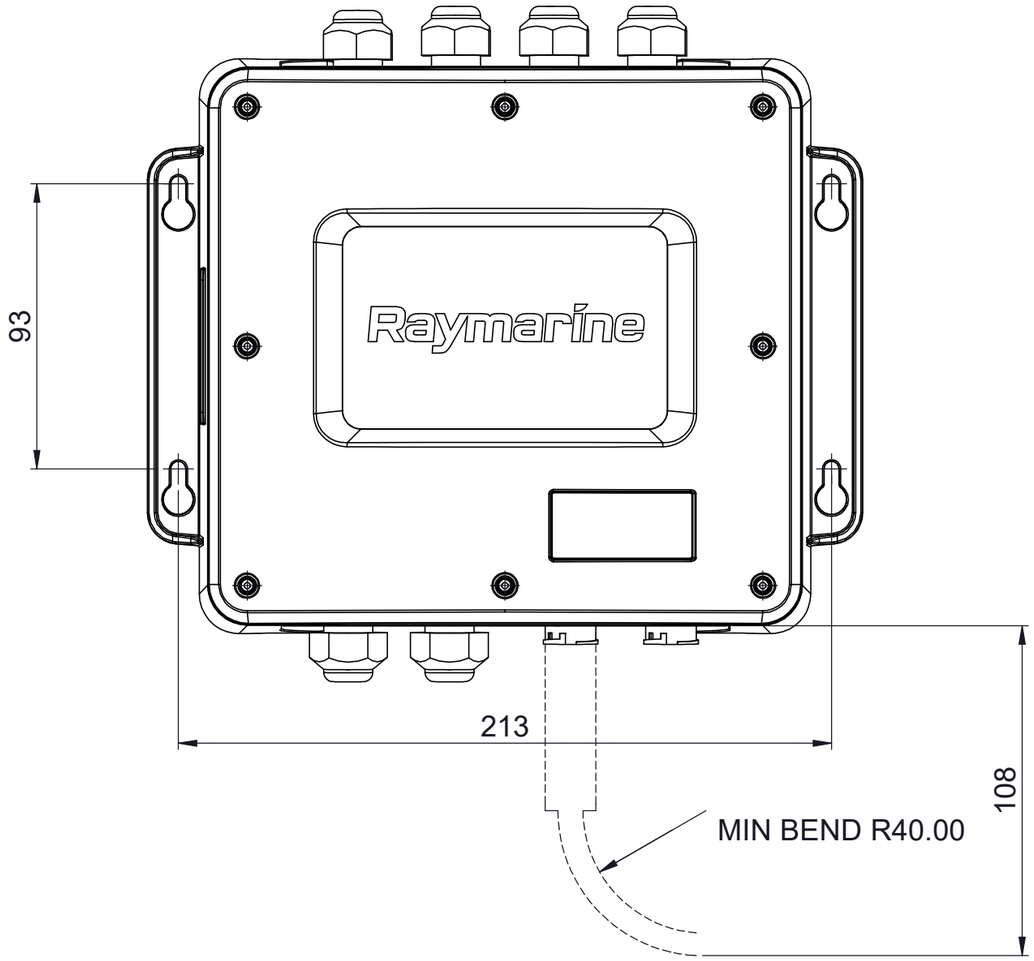

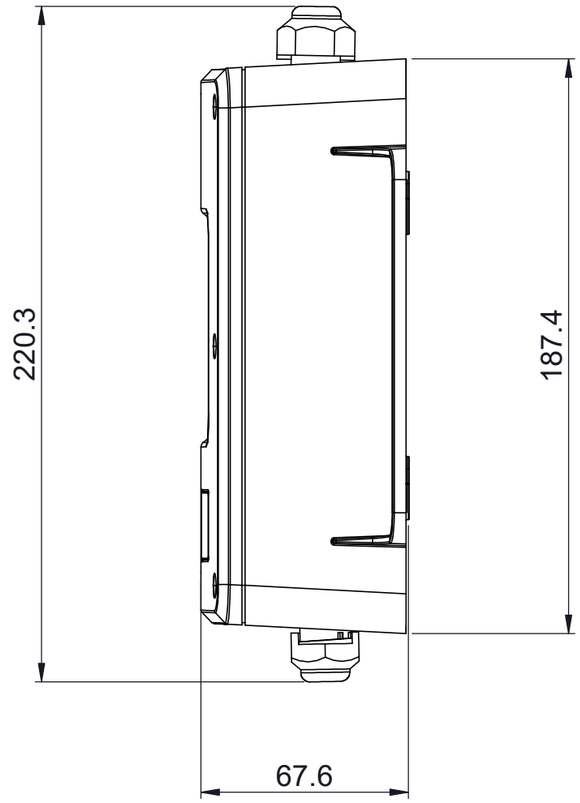

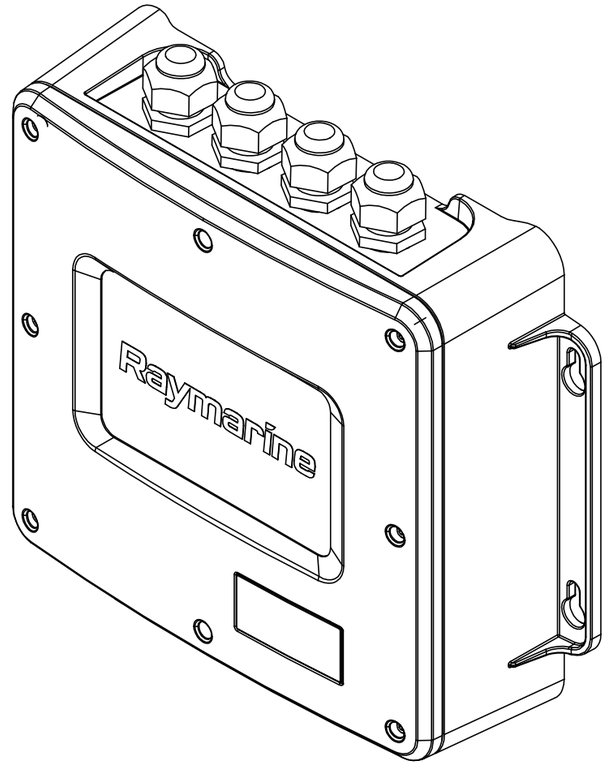

ALLOW FOR 108mm TOP AND BOTTOM OF FUSE BOX TO AVOID POSSIBLE CABLE DAMAGE

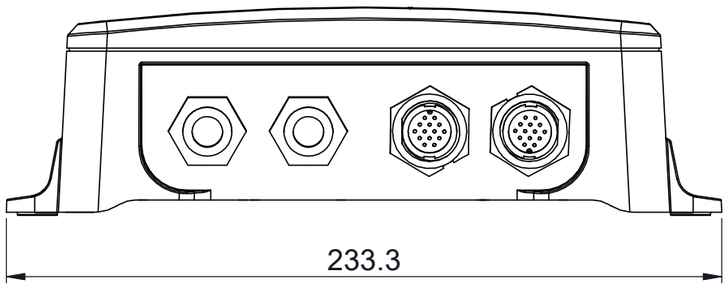

NOTES:

1) FOR INFORMATION ON CONNECTIONS AND PRODUCT SPECIFICATIONS, PLEASE REFER TO HANDBOOK, PRODUCT SUPPORT AND WORKSHOP MANUALS.

2) FOR ANY DIMENSIONAL INFORMATION NOT INCLUDED PLEASE CONTACT YOUR SALES REPRESENTATIVE.

3) DIMENSIONS SHOWN ARE ACTUAL PRODUCT SIZE AND DO NOT INCLUDE ANY CLEARANCE DATA.

Raymarine A FLIR COMPANY

© 2011 RAYMARINE LTD

THE INFORMATION CONTAINED HEREIN SHALL NOT BE REPRODUCED WITHOUT THE PRIOR WRITTEN PERMISSION OF RAYMARINE LTD

0 25 50 PRINTED SCALE

DRAWN TO BS308

DO NOT SCALE - IF IN DOUBT ASK

DR'N:	MSA	DATE: 03/01/2019	TITLE AIS5000_J Box
DIMENSIONS IN MM		SCALE: 1:2	DRAWING No. D_AIS5000_JB