NOTES:

1) FOR INFORMATION ON CONNECTIONS AND PRODUCT SPECIFICATIONS, PLEASE REFER TO HANDBOOK, PRODUCT SUPPORT AND WORKSHOP MANUALS.

2) FOR ANY DIMENSIONAL INFORMATION NOT INCLUDED PLEASE CONTACT YOUR SALES REPRESENTATIVE.

3) DIMENSIONS SHOWN ARE ACTUAL PRODUCT SIZE AND DO NOT INCLUDE ANY CLEARANCE DATA.

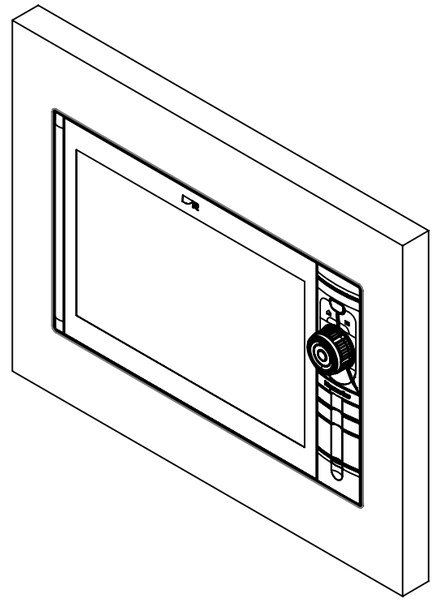

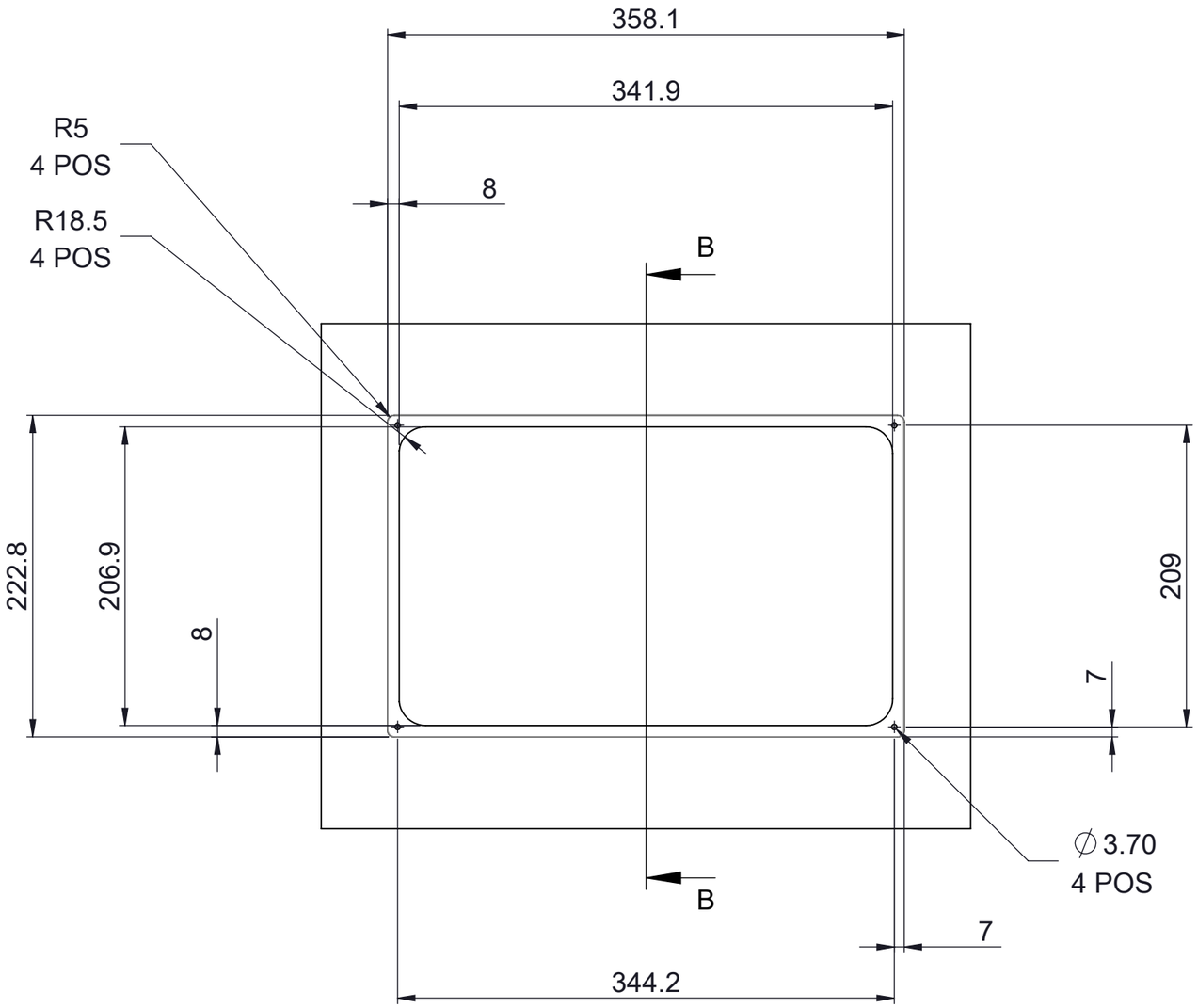

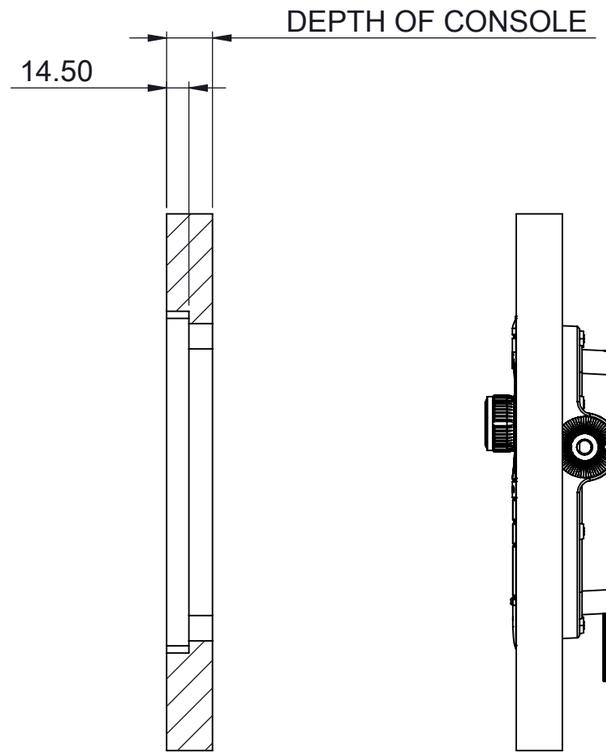

SECTION B-B
SCALE 1 : 4

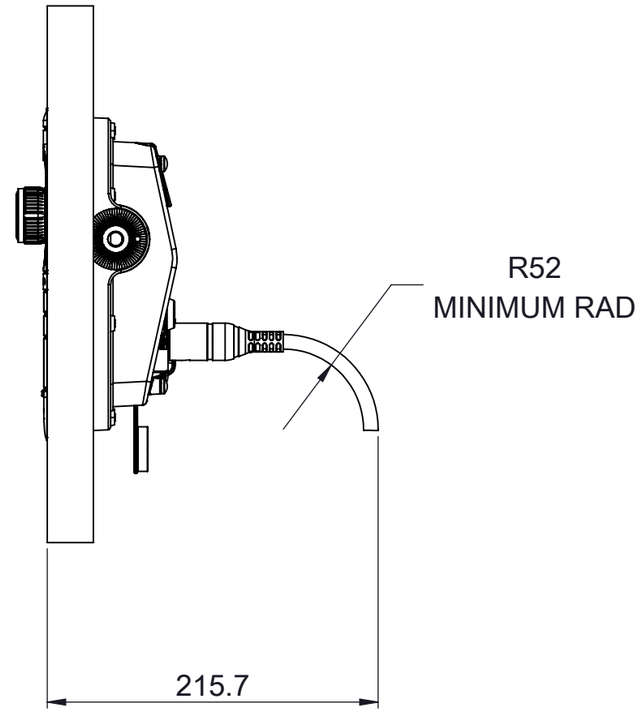

Raymarine

© 2019 RAYMARINE LTD
Company Confidential

THE INFORMATION CONTAINED HEREIN SHALL NOT BE REPRODUCED WITHOUT THE PRIOR WRITTEN PERMISSION OF RAYMARINE LTD

0 25 50
PRINTED SCALE

DRAWN TO BS308

DO NOT SCALE - IF IN DOUBT ASK

DR'N:	MA	DATE: 2023-06-05	TITLE D_ENDEAVOUR12_FM
DIMENSIONS IN MM		SCALE: 1:5	DRAWING No. D_ENDEAVOUR12_RM_SM_TM_FM