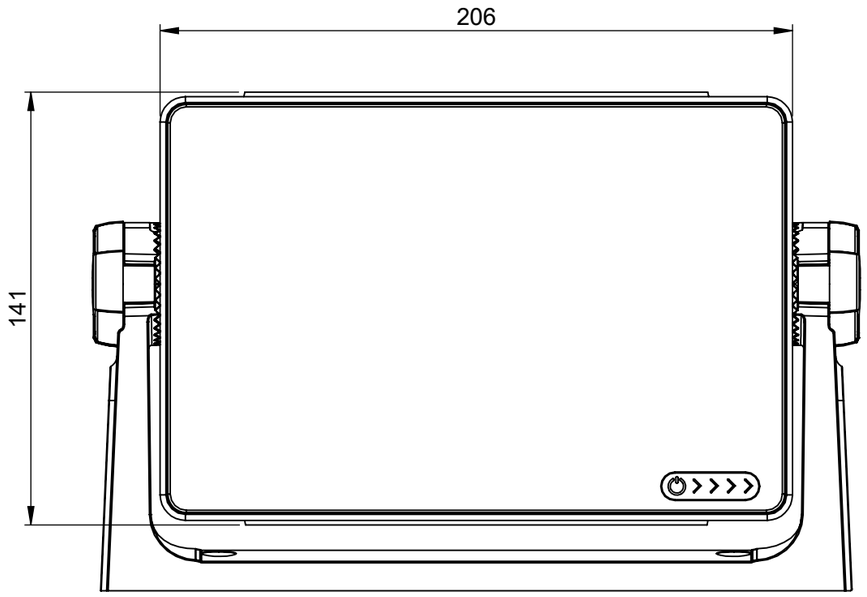

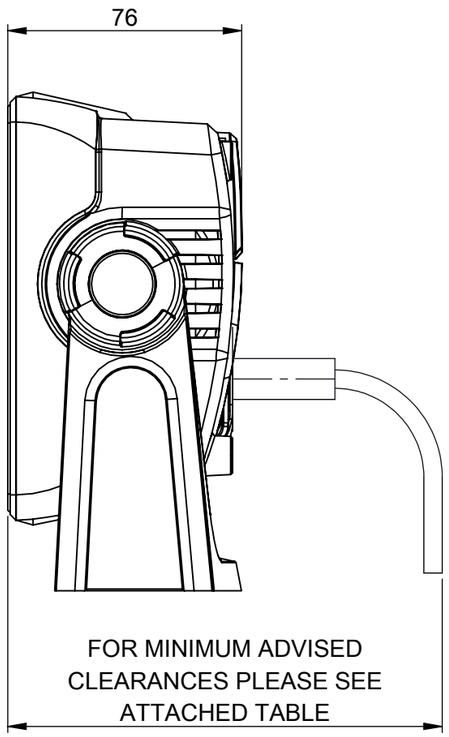

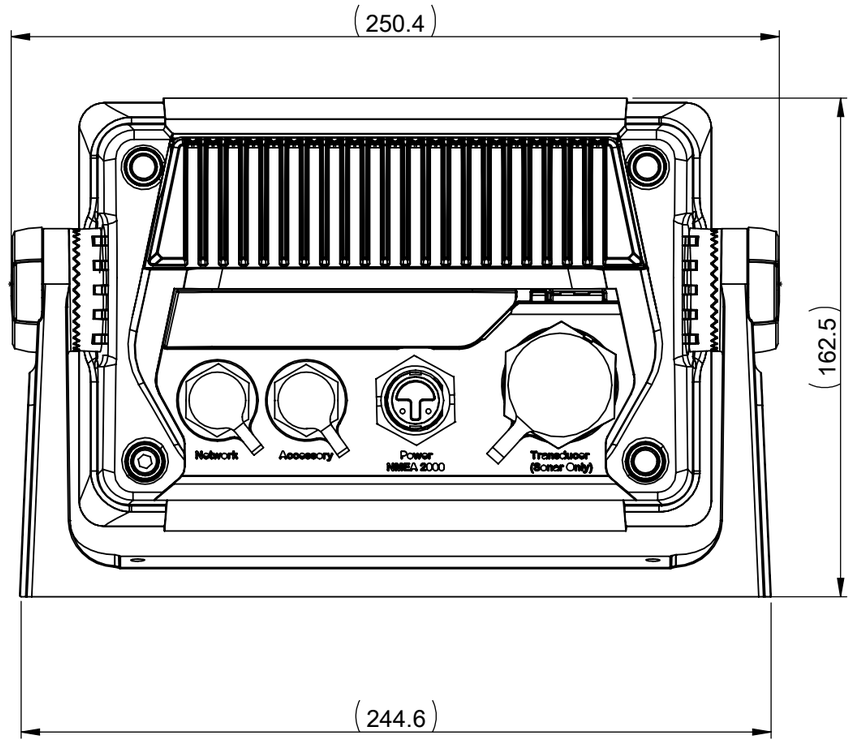

MINIMUM ADVISED CLEARANCE DIMENSION	
CABLE TYPE	LENGTH (MM)
TRANSDUCER	210
90° TRANSDUCER	110
POWER	160
90° POWER	120
ACCESSORY	150
NETWORK	150

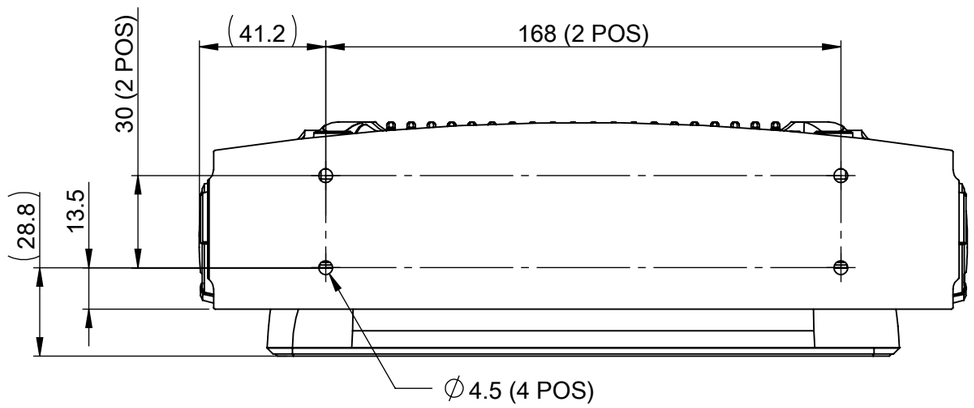

NOTES:
1) FOR INFORMATION ON INSTALLATION, CONNECTIONS AND PRODUCT SPECIFICATIONS, PLEASE REFER TO HANDBOOK, PRODUCT SUPPORT AND WORKSHOP MANUALS.

2) FOR ANY DIMENSIONAL INFORMATION NOT INCLUDED PLEASE CONTACT YOUR SALES REPRESENTATIVE.

3) DIMENSIONS SHOWN ARE ACTUAL PRODUCT SIZE AND DO NOT INCLUDE ANY CLEARANCE DATA.

Raymarine
© 2023 RAYMARINE LTD
Company Confidential
THE INFORMATION CONTAINED HEREIN SHALL NOT BE REPRODUCED WITHOUT THE PRIOR WRITTEN PERMISSION OF RAYMARINE LTD

0 25 50
PRINTED SCALE

DRAWN TO BS308

DO NOT SCALE - IF IN DOUBT ASK

DR'N: MArnfeld
DATE: 17/02/2026
DIMENSIONS IN MM
SCALE: 1:2.5

TITLE
D_AXIOM2 7_TRUNNION MOUNT

DRAWING No.
D_AXIOM2 7_TRUNNION MOUNT