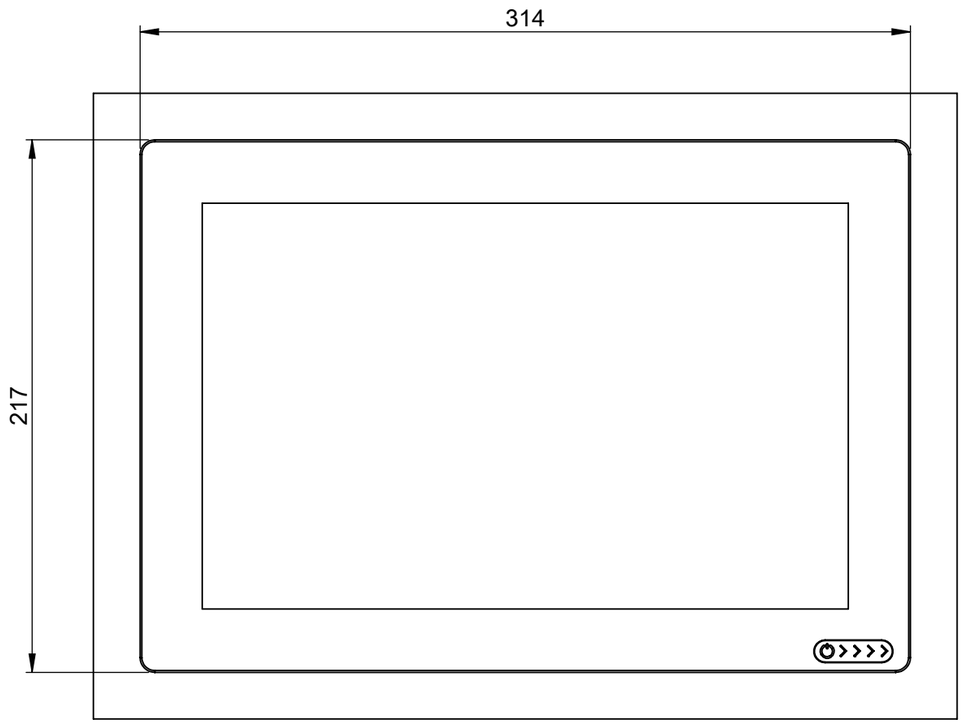

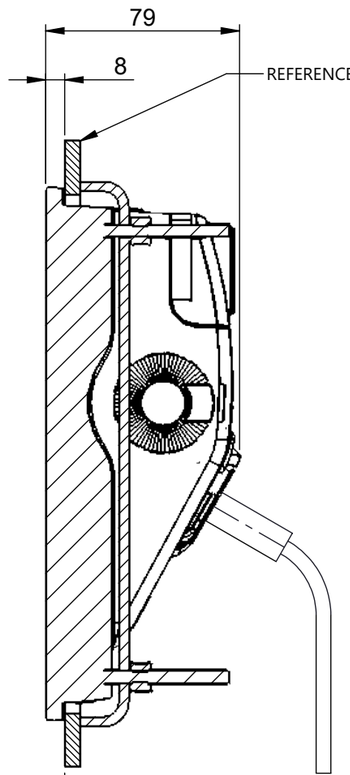

FOR MINIMUM ADVISED CLEARANCES PLEASE SEE ATTACHED TABLE

SECTION X-X

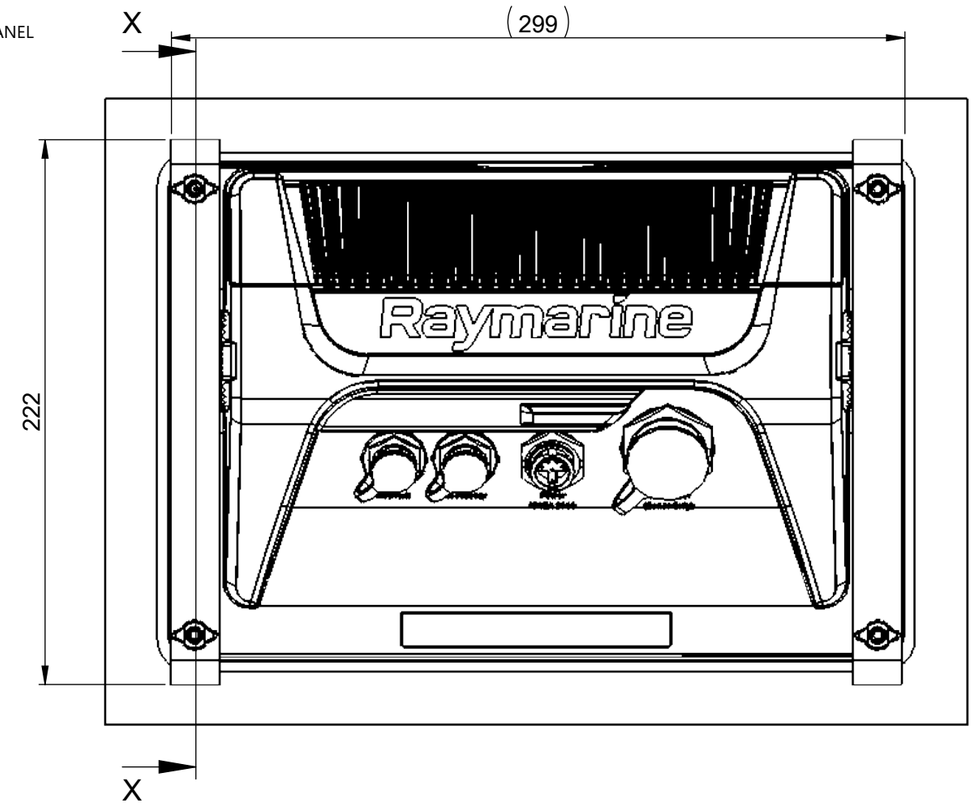

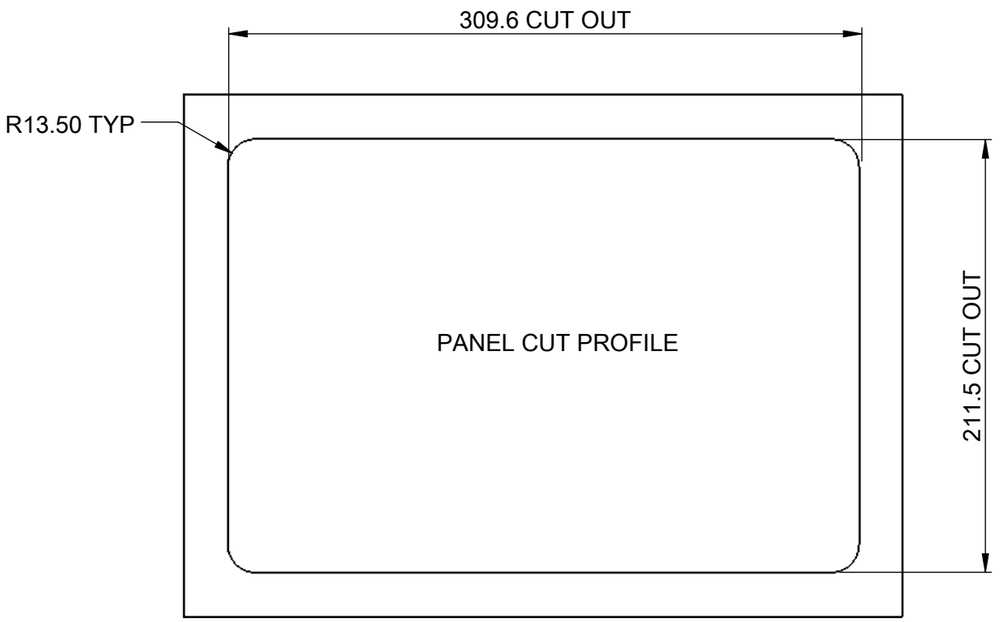

NOTES:
1) FOR INFORMATION ON INSTALLATION, CONNECTIONS AND PRODUCT SPECIFICATIONS, PLEASE REFER TO HANDBOOK, PRODUCT SUPPORT AND WORKSHOP MANUALS.

2) FOR ANY DIMENSIONAL INFORMATION NOT INCLUDED PLEASE CONTACT YOUR SALES REPRESENTATIVE.

3) DIMENSIONS SHOWN ARE ACTUAL PRODUCT SIZE AND DO NOT INCLUDE ANY CLEARANCE DATA.

MINIMUM ADVISED CLEARANCE DIMENSION	
CABLE TYPE	LENGTH (MM)
TRANSDUCER	165
90° TRANSDUCER	65
POWER	115
90° POWER	75
ACCESSORY	105
NETWORK	105

Raymarine
© 2023 RAYMARINE LTD
Company Confidential
THE INFORMATION CONTAINED HEREIN SHALL NOT BE REPRODUCED WITHOUT THE PRIOR WRITTEN PERMISSION OF RAYMARINE LTD

0 25 50
PRINTED SCALE

DRAWN TO BS308

DO NOT SCALE - IF IN DOUBT ASK

DR'N:	MArnfeld	DATE: 17/02/2026	TITLE: D_AXIOM2 12_SURFACE MOUNT
DIMENSIONS IN MM		SCALE: 1:2.5	DRAWING No.: D_AXIOM2 12_SURFACE MOUNT