

TELEDYNE | FLIR Marine

M100 / M200 SERIES

Installation & Operation Instructions

Document number: 71001 (Rev 9) | English (en-US) | Date: 10-2026 | Applicable software version: v2.10-49

Legal notices (FLIR)

Trademark and patents notice

FLIR, **Instalert**, **Infrared Everywhere**, **The World's Sixth Sense** and **ClearCruise** are registered or claimed trademarks of Teledyne FLIR LLC.
All other trademarks, trade names, or company names referenced herein are used for identification only and are the property of their respective owners.
This product is protected by patents, design patents, patents pending, or design patents pending.

Fair Use Statement

You may print no more than three copies of this manual for your own use. You may not make any further copies or distribute or use the manual in any other way including without limitation exploiting the manual commercially or giving or selling copies to third parties.

Content notice

Please ensure that you have obtained this document only from FLIR, and that it is the **latest** available version.
There are numerous third-party Internet websites (such as *www.manualslib.com*) hosting FLIR product manuals. These websites are not authorized by FLIR to do so, and are often hosting illegitimate or older versions of FLIR product manuals, which may contain inaccurate or misleading information.
To obtain the latest official documentation for a FLIR product, please visit the official FLIR website: www.marine.flir.com

Artificial Intelligence (AI) content notice

There are numerous third-party **Artificial Intelligence** (AI) services available to the public, which are capable of providing a summary or transcription of the information provided by official FLIR publications or websites, either in written or audio/video formats. These services may alter, supplement, or convey the original information provided by FLIR in inaccurate or misleading ways.
Please ensure that you have obtained this document only from FLIR, and that it is the **latest** available version.

Patents notice

This product is covered by one or more of US Patent Nos: 7470904; 7034301; 6812465; 7470902; 6929410 and other patents pending, or design patents pending.

Export control

M100 / M200 Series thermal cameras are controlled by US export laws.

There are special versions of the system that are approved for international distribution and travel. Please contact FLIR customer support if you have any questions.

Contact details can be found on the FLIR website: www.marine.flir.com

Non-Controlled information

Important:
This document does not contain export-controlled information.

English (en-US)
Document number: 71001 (Rev 9)
AG;86507;2026-11-09T15:45:13

CONTENTS

CHAPTER 1 IMPORTANT INFORMATION 8
- Safety warnings 8
- Product warnings 9
- Regulatory notices 10
  - Cleaning the camera 10
  - Routine camera inspections 10
  - Water ingress 10
  - Disclaimer 11
  - EMC installation guidelines 11
  - Connections to other equipment 11
  - Declaration of Conformity 12
  - PSTI Compliance 12
  - Product disposal 12
  - Warranty policy and registration 12
  - IMO and SOLAS 12
  - Technical accuracy 12
  - Publication copyright 12

CHAPTER 2 DOCUMENT INFORMATION 13
- 2.1 Applicable products 14
- 2.2 Additional system components 14
- 2.3 MFD / chartplotter software version 14
- 2.4 Product documentation 14
- 2.5 Applicable software version 14

CHAPTER 3 PRODUCT AND SYSTEM OVERVIEW 15
- 3.1 Product overview 16
- 3.2 Control options 16
- 3.3 Display options 17
- 3.4 Compatible Joystick Control Units (JCUs) 17
- 3.5 Compatible MFDs / chartplotters 17

CHAPTER 4 PARTS SUPPLIED 18
- 4.1 Parts supplied 19
- 4.2 Inline fuse requirement 19
  - Inline fuse and thermal breaker ratings 20

CHAPTER 5 PRODUCT DIMENSIONS 21
- 5.1 M100 / M200-Series 22
- 5.2 M100 / M200-Series with optional top-down riser 22

CHAPTER 6 LOCATION REQUIREMENTS 23
- 6.1 Warnings and cautions 24
- 6.2 General location requirements 24
- 6.3 Camera location requirements 24
- 6.4 EMC installation guidelines 25
- 6.5 Compass safe distance 25

CHAPTER 7 MOUNTING PREPARATION 27
- 7.1 Tools required 28
- 7.2 Camera orientation 28
  - Ball-down (upside down) mounting: rotating the front cover 28
- 7.3 Routing cables through the riser's sidewall 29

CHAPTER 8 MOUNTING 30
- 8.1 Camera mounting 31

Inserting the studs into the camera base 31
Mounting the camera ball-up 32
Mounting the camera ball-down 34

CHAPTER 9 CONNECTIONS OVERVIEW 36
9.1 Connections overview 37
9.2 Video connections 37
9.3 Connecting cables 38
9.4 Orientation of right-angled connectors 38
9.5 General cabling guidance 38
Cable types and length 38
Cable routing and bend radius 39
Strain relief 39
Circuit isolation 39
Cable shielding 39

CHAPTER 10 NETWORK CONNECTIONS 40
10.1 Network connections 41
10.2 Power over Ethernet (PoE) 41
10.3 PoE isolation coupler 41
10.4 Network cable connector types 41
10.5 Compatible MFDs / chartplotters 41
10.6 Network connection examples 42
Camera system with direct connection to a Web browser 42
Camera system with a Web browser and an optional JCU 43
Camera system with a compatible MFD / chartplotter and JCU 43
Single-camera system with analog video monitor and JCU 44
Multi-camera system with a video monitor, 2 compatible MFDs / chartplotters, 2 JCUs, and a web browser 45

CHAPTER 11 POWER CONNECTIONS 46
11.1 Power connection 47
11.2 Inline fuse and thermal breaker ratings 47
11.3 Power distribution 47
11.4 Power cable extension (12 / 24 V systems) 49
11.5 Power cable drain wire connection 50
11.6 Positive ground systems 50

CHAPTER 12 IP ADDRESS DISCOVERY 51
12.1 Camera IP address discovery 52
12.2 How to find an IP address 52
12.3 Setting a static IP address 53
12.4 Accessing the camera's web interface page 53

CHAPTER 13 CAMERA CONFIGURATION AND OPERATION 54
13.1 Camera control 55
Camera control options 55
Pan, tilt and zoom (PTZ) 55
Home position 55
Surveillance mode 55
13.2 Thermal camera image 56
Thermal camera status icons 56

13.3 Image adjustments....57
Thermal camera scene presets....57
Thermal camera color modes....57
Thermal camera reverse polarity....57
13.4 Web browser interface....57
Logging in to the Web browser user interface....57
Live Video page....59
Control icons....60
Ball-down (upside down) mode....61
CHAPTER 14 MAINTENANCE....62
14.1 Service and maintenance....63
14.2 Routine camera inspections....63
14.3 Cleaning the camera....63
CHAPTER 15 SYSTEM CHECKS AND TROUBLESHOOTING....64
15.1 Troubleshooting....65
15.2 Camera not shown in your PC / laptop / tablet's device list....65
15.3 Video not displayed....65
15.4 Cannot control camera from MFD / chartplotter....65
15.5 Erratic or unresponsive controls....66
15.6 Camera image is inverted....66
15.7 Camera image too dark or too light....66
15.8 Product alerts....66
15.9 FLIR Maritime technical support and servicing....67
CHAPTER 16 TECHNICAL SPECIFICATION....68
16.1 Physical specification....69
16.2 Power specification....69
16.3 Network specification....69
16.4 Environmental specification....69
16.5 Video specification....69
16.6 Conformance specification....69
CHAPTER 17 SPARES AND ACCESSORIES....70
17.1 M100 / M200 Series camera accessories....71
17.2 FLIR networking accessories....72
17.3 RayNet to RayNet cables and connectors....74
17.4 RayNet to RJ45, and RJ45 (SeaTalk HS) adapter cables....75
APPENDIX A SOFTWARE RELEASE HISTORY....77

CHAPTER 1: IMPORTANT INFORMATION

Safety warnings

Warning: Product installation and operation

• This product must be installed and operated in accordance with the instructions provided. Failure to do so could result in personal injury, damage to your vessel and/or poor product performance.

• Certified installation by an approved installer is recommended. A certified installation qualifies for enhanced product warranty benefits. Contact your dealer for further details.

Warning: Weather conditions

When working in adverse weather conditions, ensure that a full risk assessment is carried out prior to working aloft. Adverse weather conditions can include — but are not restricted to — high winds, heavy rain, snow, ice, or a sea state which may cause vessel pitch and roll.

Warning: Use a safe system of work

To prevent potential product damage, vessel damage or personal injury, ensure that all installers use a safe system of work, as defined by applicable regional and national health and safety regulations.

It is strongly recommended that the unpacking and installation procedure is carried out by trained and competent commercial shipyard personnel, or equivalent professionals experienced in marine lifting and handling procedures.

Warning: Working aloft

When working at height, ensure that:

• All applicable regulatory, employer, shipyard and vessel health & safety requirements are adhered to, including but not limited to the inspection and use of Personal Protective Equipment (PPE), such as approved safety harnesses and protective gloves etc.

• All nearby devices with moving parts or which emit Radio Frequency (RF) radiation are fully electrically and mechanically isolated.

• Someone in authority and at ground level is aware of the required works and that suitable clear warnings are in place.

• A safety cordon is put in place below the working area.

• All access routes are secure. Beware of wet or slippery surfaces, such as work areas or ladder rungs etc.

• All equipment and loose items such as replacement equipment and tools are safely stowed or secured, to prevent a drop hazard.

Warning: Potential ignition source

This product is NOT approved for use in hazardous/flammable atmospheres. Do NOT install in a hazardous/flammable atmosphere (such as in an engine room or near fuel tanks).

Warning: Switch off power supply

Ensure that the vessel's power supply is switched OFF before starting to install this product. Do NOT connect or disconnect equipment with the power switched on, unless instructed to do so in this document.

Warning: Entrapment hazard

This product features moving parts, which provide a potential entrapment hazard. Keep clear of moving parts at all times.

Warning: Ensure safe navigation

This product is intended only as an aid to navigation and must never be used in preference to sound navigational judgment. Only official government charts and notices to mariners contain all the current information needed for safe navigation, and the captain is responsible for their prudent use. It is the user's responsibility to use official government charts, notices to mariners, caution and proper navigational skill when operating this or any other product.

Warning: Maintain a permanent watch

Always maintain a permanent watch, this will allow you to respond to situations as they develop. Failure to maintain a permanent watch puts yourself, your vessel and others at serious risk of harm.

Product warnings

Warning: Product grounding

Before applying power to this product, it MUST be correctly grounded, in accordance with the instructions provided.

Warning: Positive ground systems

Do NOT connect this unit to a system which has positive grounding.

Warning: Ensure all equipment has isolated power supply

This product has an isolated power supply. To prevent potential damage to equipment, it is recommended that any external equipment connected to this product also has an isolated power supply.

Warning: Power supply voltage

Connecting this product to a voltage supply greater than the specified maximum rating may cause permanent damage to the unit. For the correct voltage, refer to the information label affixed to the product.

Warning: PoE isolation coupler

Some networks require an inline Power over Ethernet (PoE) isolation coupler to be fitted before the camera can be connected to the network.

The inline PoE isolation coupler may be required regardless of whether a network device (e.g. an MFD / chartplotter, or network switch) outputs PoE or not.

Before connecting the camera to a network, refer to your network device manufacturer for more information.

Warning: Corrosion

To avoid accelerated galvanic corrosion of the product, ensure that a non-metallic isolation mount is used when fitting the product directly to large stainless steel platforms / mounts, or directly to steel construction vessels.

Warning: Product painting or coating

Painting any part of the camera is NOT recommended, as it could impact the thermal sensitivity of the enclosure and the camera's electronic components, especially in warmer climates. Painting the enclosure may invalidate your warranty.

Caution: Power supply protection

When installing this product, ensure that the power source is adequately protected by means of a suitably-rated fuse or thermal circuit breaker.

Caution: Service and maintenance

This product contains no user serviceable components. Please refer all maintenance and repair to authorized FLIR dealers. Unauthorized repair may affect your warranty.

Regulatory notices

Cleaning the camera

The camera housing and lens will require occasional cleaning. You should clean the lens when image quality degradation is noticed or excessive contaminant buildup is seen. Clean the interface between the yoke and base often to prevent accumulation of debris or salt deposits.

When cleaning this product:

- Do NOT wipe the lens window with a dry cloth, or with abrasive materials such as paper or scrub brushes, as this could scratch the coating.
- Do NOT use acid or ammonia based products.
- Do NOT pressure wash.

Particular care should be taken when cleaning the lens window, this has a protective anti-reflective coating which may be damaged by improper cleaning.

1. Switch off the power to the unit.
2. Clean the camera body with a clean, soft cotton cloth. You can moisten the cloth and use a mild detergent if required.
3. Clean the camera lens.
   - Rinse the lens with fresh water to remove all dirt particles and salt deposits, and allow to dry naturally.
   - If any spots or smears remain, very gently wipe the lens window with a clean microfibre cloth or soft cotton cloth.
   - If necessary, use isopropyl alcohol (IPA) or a mild detergent to remove any remaining spots or marks.

Routine camera inspections

It's important to routinely inspect cameras and associated mounting hardware.

Important:
Routinely inspect the camera and its mounting surface. When the camera is powered off, grasp it firmly at the base and confirm it is rigid and secure. Then hold the camera above the base and confirm it is rigid, while rotating freely.

- Conduct both visual and mechanical checks during your inspection, including the use of torque wrenches to ensure that all mounting fixings are secured to the recommended torque, as stated in the installation instructions.
- Ensure that the camera and weight-bearing mountings (including any risers) are installed securely, that the coated surfaces are intact, and that there are no signs of damage.
- Maintain a regular inspection schedule. Both visual and mechanical checks should be included in each inspection. Maintain a record of all inspections.

Water ingress

Water ingress disclaimer

Although the waterproof rating capacity of this product meets the stated standard (refer to the product's *Technical Specification*), water intrusion and subsequent equipment failure may occur if the product is not installed correctly or subjected to commercial high-pressure washing. FLIR will not warrant products subjected to high-pressure washing.

Disclaimer

FLIR does not warrant that this product is error-free or that it is compatible with products manufactured by any person or entity other than FLIR.

FLIR is not responsible for damages or injuries caused by your use or inability to use the product, by the interaction of the product with products manufactured by others, or by errors in information utilized by the product supplied by third parties.

Third-party hardware, such as converters, adapters, routers, switches, Access Points etc., provided by third parties, may be made available directly to you by other companies or individuals under separate terms and conditions, including separate fees and charges. Teledyne FLIR LLC or its affiliates have not tested or screened the third-party hardware.

FLIR has no control over, and is not responsible for:

- (a) the content and operation of such third-party hardware; or:
- (b) the privacy or other practices of such third-party hardware.

The fact that FLIR's documentation may make reference to such third-party hardware does not indicate any approval or endorsement of any such third-party hardware. FLIR may reference such third-party hardware only as a convenience.

THIS INFORMATION IS MADE AVAILABLE BY FLIR ON THE BASIS THAT YOU EXCLUDE TO THE FULLEST EXTENT LAWFULLY PERMITTED ALL LIABILITY WHATSOEVER FOR ANY LOSS OR DAMAGE HOWSOEVER ARISING OUT OF THE USE OF THIS INFORMATION OR RELIANCE UPON THIS INFORMATION.

FLIR does not exclude **FLIR**'s liability (if any) to you for personal injury or death resulting from **Teledyne FLIR LLC** negligence, for fraud or for any matter which it would be illegal to exclude or to attempt to exclude.

EMC installation guidelines

FLIR equipment and accessories conform to the appropriate Electromagnetic Compatibility (EMC) regulations, to minimize electromagnetic interference between equipment and minimize the effect such interference could have on the performance of your system.

Correct installation is required to ensure that EMC performance is not compromised.

Note:
In areas of extreme EMC interference, some slight interference may be noticed on the product. Where this occurs the product and the source of the interference should be separated by a greater distance.

For **optimum** EMC performance we recommend that wherever possible:

- FLIR equipment and cables connected to it are:
  - At least 1 m (3.3 ft) from any equipment transmitting or cables carrying radio signals e.g. VHF radios, cables and antennas. In the case of SSB radios, the distance should be increased to 2 m (6.6 ft).
  - More than 2 m (6.6 ft) from the path of a radar beam. A radar beam can normally be assumed to spread 20 degrees above and below the radiating element.
- The product is supplied from a separate battery from that used for engine start. This is important to prevent erratic behavior and data loss which can occur if the engine start does not have a separate battery.
- FLIR specified cables are used.
- Cables are not cut or extended, unless doing so is detailed in the installation manual.

Note:
Where constraints on the installation prevent any of the above recommendations, always ensure the maximum possible separation between different items of electrical equipment, to provide the best conditions for EMC performance throughout the installation.

Connections to other equipment

Requirement for ferrites on non-FLIR cables:

If your FLIR equipment is to be connected to other equipment using a cable not supplied by FLIR, a suppression ferrite MUST always be attached to the cable near the FLIR unit.

For more information, refer to your third-party cable manufacturer.

Declaration of Conformity

Declaration of Conformity for product sold into the UK, Australia and New Zealand, and EU member state regions.

Teledyne Raymarine UK Limited (FLIR) declares that the products listed below are in conformity with the relevant sections of the listed designated standards and / or other normative documents:

- M100-Series M132 thermal cameras, part numbers: E70431 and E70432.
- M200-Series M232 thermal cameras, part numbers: E70353 and E70354.

Region	Standard	Mark
UK	EMC Regulations 2016	UKCA
EU	EMC Directive 2014/30/EU	CE
Australia and New Zealand	AS/NZS 4417.1 & 2	

The original Declaration of Conformity certificates may be obtained via the documentation page at www.bit.ly/m200-docs

PSTI Compliance

For products sold into the United Kingdom (UK), use the following link to obtain the product's Statement of Compliance with the *Product Security and Telecommunications Infrastructure* (PSTI) Regulations:

Visit the following web address and enter the product's model name or number (SKU) into the provided search field:

- www.bit.ly/rym-sec-com

Product disposal

Dispose of this product in accordance with the WEEE Directive.

The Waste Electrical and Electronic Equipment (WEEE) Directive requires the recycling of waste electrical and electronic equipment which contains materials, components and substances that may be hazardous and present a risk to human health and the environment when WEEE is not handled correctly.

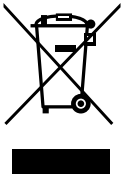

Equipment marked with the crossed-out wheeled bin symbol indicates that the equipment should not be disposed of in unsorted household waste.
Local authorities in many regions have established collection schemes under which residents can dispose of waste electrical and electronic equipment at a recycling center or other collection point.
For more information about suitable collection points for waste electrical and electronic equipment in your region, refer to the Raymarine website:
https://bit.ly/rym-recycling

Warranty policy and registration

Visit the Raymarine / FLIR Maritime website to **read the latest warranty policy**, and **register** your product's warranty online:
www.bit.ly/rym-warranty

It is important that you register your product to receive full warranty benefits. Your product package includes a barcode label indicating the serial number of the unit. This serial number is also provided on a label affixed to the product itself. You will need this serial number when registering your product online.

IMO and SOLAS

The equipment described within this document is intended for use on leisure marine boats and workboats NOT covered by International Maritime Organization (IMO) and Safety of Life at Sea (SOLAS) Carriage Regulations.

Technical accuracy

To the best of our knowledge, the information in this document was correct at the time it was produced. However, FLIR cannot accept liability for any inaccuracies or omissions it may contain. In addition, our policy of continuous product improvement may change specifications without notice. As a result, FLIR cannot accept liability for any differences between the product and this document. Please check the FLIR website (www.flir.com/marine/support) to ensure you have the most up-to-date version(s) of the documentation for your product.

Publication copyright

Copyright © 2026 Teledyne FLIR LLC. All rights reserved. No parts of this material may be copied, translated, or transmitted (in any medium) without the prior written permission of Teledyne FLIR LLC.

CHAPTER 2: DOCUMENT INFORMATION

CHAPTER CONTENTS

- 2.1 Applicable products (page 14)
- 2.2 Additional system components (page 14)
- 2.3 MFD / chartplotter software version (page 14)
- 2.4 Product documentation (page 14)
- 2.5 Applicable software version (page 14)

2.1 Applicable products

This document is applicable to the following products:

Product	Description
(**E70432**) M132 (9 Hz)	Thermal tilt-only, night-vision IP video camera
(**E70431**) M132 (30 Hz)	Thermal tilt-only, night-vision IP video camera
(**E70354**) M232 (9 Hz)	Thermal pan-and-tilt, night-vision IP video camera
(**E70353**) M232 (30 Hz)	Thermal pan-and-tilt, night-vision IP video camera

2.2 Additional system components

M100-Series and M200-Series thermal cameras can be used in conjunction with the following optional items, available separately from FLIR or third-party retailers:

- A compatible Joystick Control Unit (JCU) (e.g. **JCU-4 (E70695 / E70697)**), for controlling the camera remotely. Each JCU can be paired with multiple thermal cameras, and each camera can be paired to multiple JCUs. For a list of compatible JCUs, refer to: **p.17 — Compatible Joystick Control Units (JCUs)**
- **IP video decoder**: uses the digital IP video output from your M100-Series and M200-Series thermal camera, and converts it to an analog composite-video feed (NTSC or PAL), suitable for an analog video display. Refer to third-party retailers for suitable products.

2.3 MFD / chartplotter software version

When using the camera with a multifunction display (MFD) or chartplotter, ensure that the MFD / chartplotter is using the latest software version.

For instructions on how to obtain and update the MFD / chartplotter software, refer to the documentation that accompanies the display.

2.4 Product documentation

The following documentation is applicable to your product:

Description	Part number
M100 / M200 Thermal Camera Installation and Operation Instructions (this document) Installation and operation of an M100–Series or M200–Series thermal camera and connection to a wider system of marine electronics.	71001
M100 / M200–Series surface mounting template Mounting diagram for mounting an M100–Series or M200–Series thermal camera.	77001
M100 / M200–Series top-down riser mounting template Mounting diagram for mounting the top-down riser for an M100–Series or M200–Series thermal camera.	77003
JCU-3 Remote Keypad Installation Instructions Installation of a JCU-3 Remote Keypad and connection to a wider system of marine electronics.	71002
JCU-4 Remote Keypad Installation Instructions Installation of a JCU-4 Remote Keypad and connection to a wider system of marine electronics.	71007

2.5 Applicable software version

This document has been updated to reflect the following M100 & M200 Series software version:

Applicable software version:
v2.10-49

Check the website for the latest software:

M100 & M200 Series software download link
www.bit.ly/m200-download

CHAPTER 3: PRODUCT AND SYSTEM OVERVIEW

CHAPTER CONTENTS

- 3.1 Product overview (page 16)
- 3.2 Control options (page 16)
- 3.3 Display options (page 17)
- 3.4 Compatible Joystick Control Units (JCUs) (page 17)
- 3.5 Compatible MFDs / chartplotters (page 17)

3.1 Product overview

The M100 / M200–Series is a maritime thermal imaging system for use on nearly any kind of vessel. It provides a clear image in low-light and no-light conditions. For example, a thermal camera can help you navigate at night or identify obstacles in areas of low visibility or even total darkness.

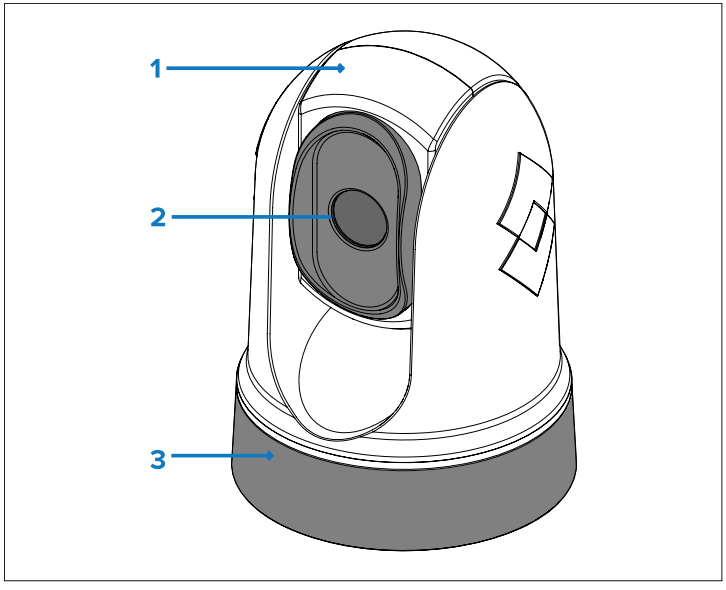

1. Tilt assembly.
2. Thermal camera lens window.
3. Pan assembly (fixed position for M100-Series cameras).

M100 / M200-Series cameras have the following key functions and features:

- IP connectivity to simplify installation and system integration.
- H264-encoded IP video stream (convertible to analog NSTC / PAL composite video, via an optional IP video decoder; available separately from third-party retailers).
- Pan and tilt operations (tilt only for M100-Series) via dedicated Joystick Control Unit (JCU), multifunction display (MFD), or web browser.
- Automatic camera adjustment to suit changing conditions.
- Preset modes (*Scenes*) optimized for prevailing conditions.
- Automatic window heaters to de-ice the lens window in cold weather.
- 12 V or 24 V dc power.

3.2 Control options

The following illustration shows the different options available for controlling the camera.

These options are not exclusive; the camera can be controlled from more than one device.

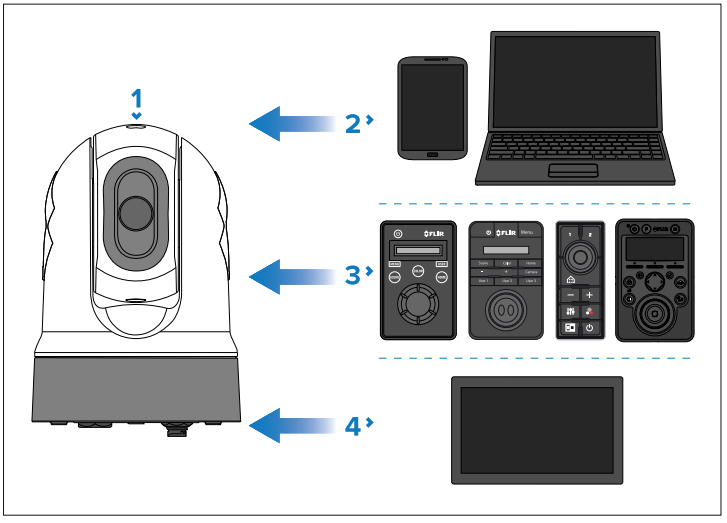

Note:
This illustration does NOT include any cables or accessories that may be required to connect the products shown; it is simply an overview of control options. For more information on specific connections, refer to the *Connections* section.

1. Camera.
2. Laptop or another Ethernet device running a Web browser, via an Ethernet connection.

3. Compatible Joystick Control Unit (JCU), via an Ethernet connection.
4. Compatible MFD / chartplotter, via an Ethernet connection.

3.3 Display options

The following illustration shows the different options available for displaying the camera's video feeds.

For more information on the video connection, refer to:
p.37 — Video connections

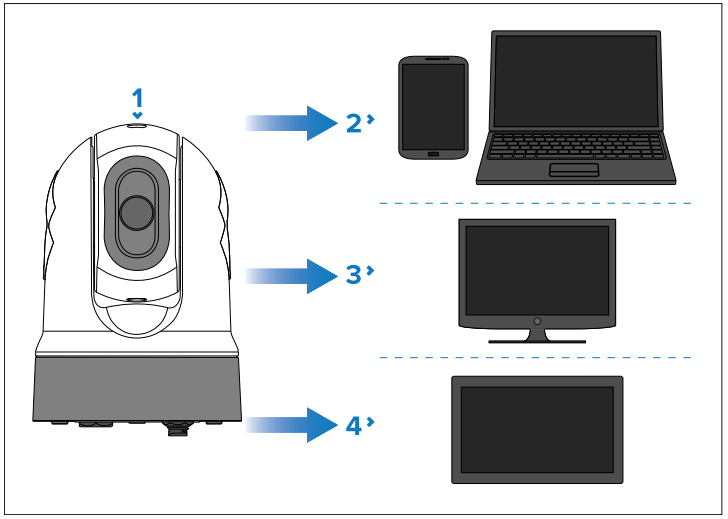

Note:
This illustration does NOT include any cables or accessories that may be required to connect the products shown. For more information on specific connections, refer to the *Connections* section.

1. Camera.
2. Laptop or another Ethernet device running a Web browser: via an Ethernet connection.
3. Analog video monitor: via an IP video decoder (available separately from a third-party retailer).
4. Compatible MFD / chartplotter: via an Ethernet connection.

3.4 Compatible Joystick Control Units (JCUs)

With a compatible Joystick Control Unit (JCU) connected to the camera via a network switch, you can use the JCU's physical controls to control the camera remotely.

The camera's On-Screen Display (OSD) menu can also be accessed and further controlled using a connected JCU. For more information on the OSD menu options available, refer to the '*OSD Menu*' section of this document.



JCU variant	Documentation
JCU-1 (500-0385-00), retired	www.bit.ly/jcu1-docs
JCU-2 (500-0398-10), retired	www.bit.ly/jcu2-docs
JCU-3 (A80510), available separately	www.bit.ly/jcu3-docs
JCU-4 (E70695 / E70697), available separately	www.bit.ly/jcu4-docs

3.5 Compatible MFDs / chartplotters

Some multifunction displays (MFDs) / chartplotters may support camera control and IP digital video streaming, via the camera's RayNet (Ethernet) connector.

For more information, refer to:
p.41 — Compatible MFDs / chartplotters

CHAPTER 4: PARTS SUPPLIED

CHAPTER CONTENTS

- 4.1 Parts supplied (page 19)
- 4.2 Inline fuse requirement (page 19)

4.1 Parts supplied

The following items are supplied with your product.

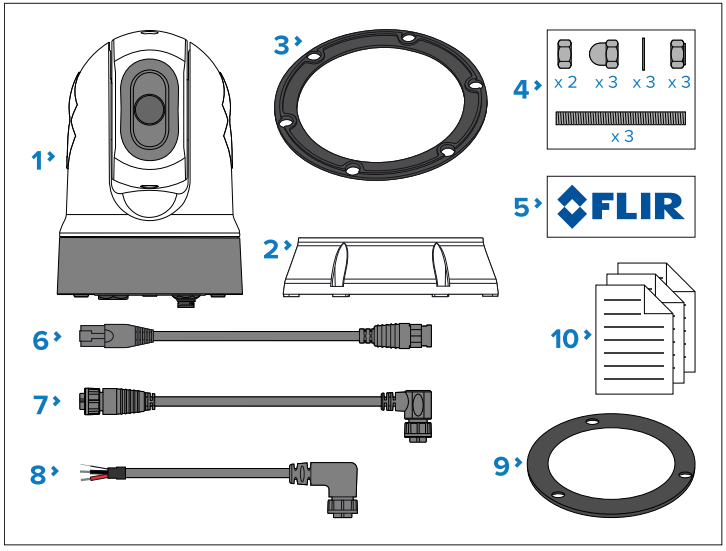

	Description
1	Thermal camera.
2	Top-down riser.
3	Riser base-seal.
4	(1) Fixings: 3x M6 threaded studs, 2x M6 flat nuts, 3x M6 dome nuts, 3x M6 flat washers and 3x M6 nyloc nuts.
5	2 x Self-adhesive decals (for ball-down (upside down) mounting only).
6	RayNet (Ethernet) to RJ45 adapter cable, 100 mm (3.94 in).
7	(2) Right-angled RayNet (Ethernet) to RayNet (Ethernet) cable, 10 m (32.8 ft).
8	(2) Right-angled 3-pin power cable, 10 m (32.8 ft).
9	Thermal camera base-seal.
10	Documentation pack.

(1) The supplied flat nuts must only be used to assist in winding the studs into the camera's base. If required, you can fit the supplied dome nuts to the studs in order to cover exposed ends. **Do NOT** use dome nuts with a riser.
(2) The supplied right-angled RayNet (Ethernet) and Power cables are suitable for mounting on surfaces up to 25.4 mm (1.0 in.) thick. When mounting on thicker surfaces, you may need to use RayNet (Ethernet) and Power cables with straight connectors (available separately).

Note:
For further details on network hardware and cables, refer to:
p.70 — Spares and accessories

4.2 Inline fuse requirement

If your product is NOT supplied with an inline fuse (whether separately or fitted to the power cable), you MUST fit a suitably-rated inline fuse to your product's red power wire, housed in a waterproof fuse holder.

The illustration below shows the two main types of inline fuse with waterproof holder, for use in marine electronics installations. Fuses in a variety of ratings are widely available at chandleries and marine electrical retailers.
Select one of the following fuse types to protect your product:

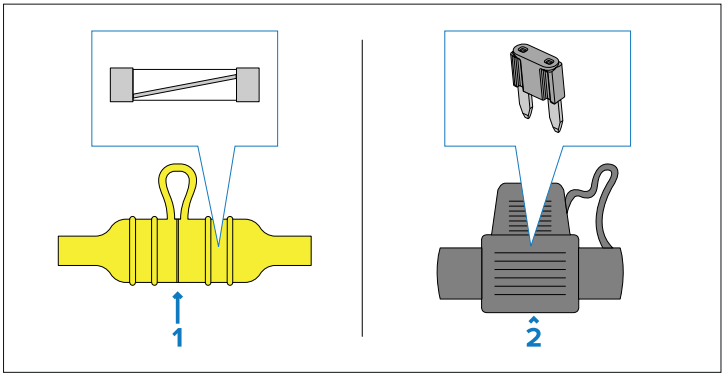

1. Waterproof fuse holder containing a "glass"-type inline fuse.
2. Waterproof fuse holder containing a "blade"-type inline fuse.

Fuse ratings:

- *Voltage rating* — must be equal to or greater than the voltage of your vessel's power supply.
- *Current rating* — refer to the *Inline fuse and thermal breaker rating* section in this document.

Inline fuse and thermal breaker ratings

The following inline fuse and thermal breaker ratings apply to your product:

Inline fuse rating	Thermal breaker rating
5A slow blow	5A (if only connecting one device)

Note:

• The suitable fuse rating for the thermal breaker is dependent on the number of devices you are connecting. If in doubt, consult an authorized dealer.

• Your product's power cable may be supplied with a fitted inline fuse (depending on product variant). If not, you must add an inline fuse (rated as stated above) to the positive wire of your product's power connection.

CHAPTER 5: PRODUCT DIMENSIONS

CHAPTER CONTENTS

- 5.1 M100 / M200-Series (page 22)
- 5.2 M100 / M200-Series with optional top-down riser (page 22)

5.1 M100 / M200-Series

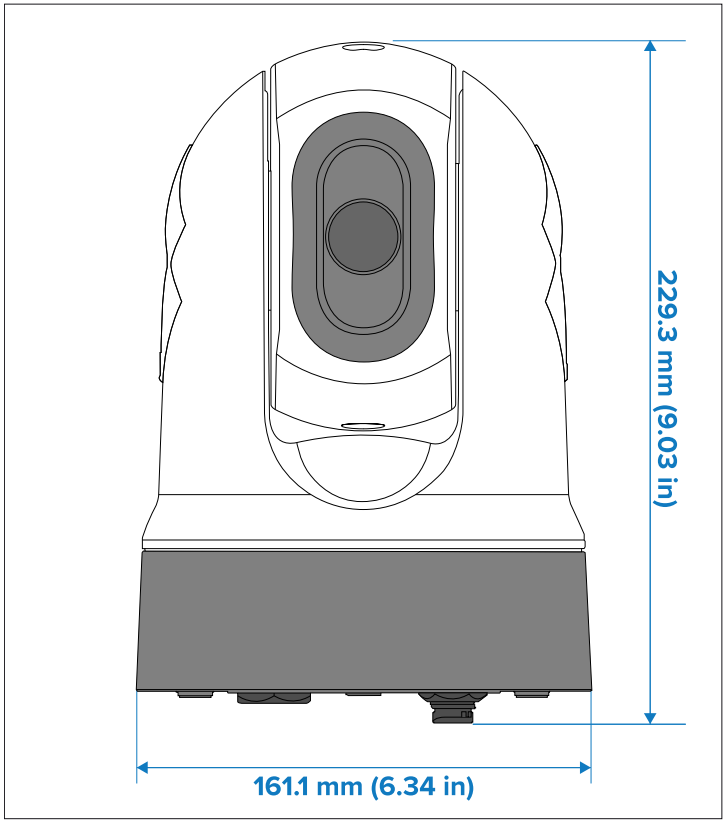

5.2 M100 / M200-Series with optional top-down riser

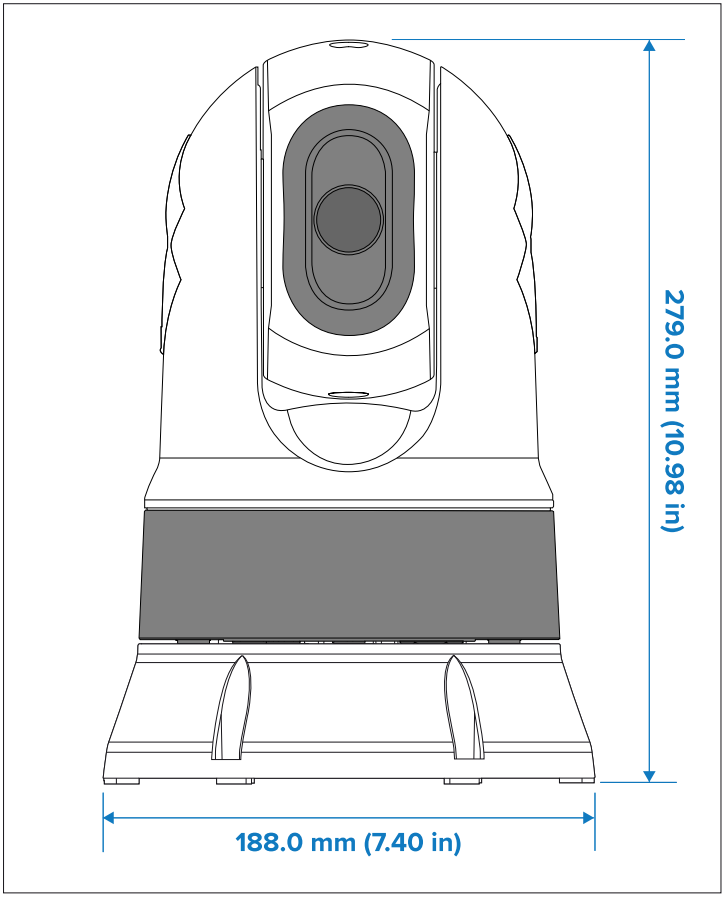

Note:
Base diameter with riser base-seal fitted is 190 mm (7.48 in).

CHAPTER 6: LOCATION REQUIREMENTS

CHAPTER CONTENTS

- 6.1 Warnings and cautions (page 24)
- 6.2 General location requirements (page 24)
- 6.3 Camera location requirements (page 24)
- 6.4 EMC installation guidelines (page 25)
- 6.5 Compass safe distance (page 25)

6.1 Warnings and cautions

Important:
Before proceeding, ensure that you have read and understood the warnings and cautions provided in the following section of this document:

• **p.8 — Important information**



Warning: Potential ignition source

This product is NOT approved for use in hazardous/flammable atmospheres. Do NOT install in a hazardous/flammable atmosphere (such as in an engine room or near fuel tanks).

6.2 General location requirements

Important considerations when choosing a suitable location for your product.

This product is suitable for mounting below decks.

The product should be mounted where it will be:

- protected from physical damage and excessive vibration.
- well ventilated and away from heat sources.

When choosing a location for the product, consider the following points to ensure reliable and trouble-free operation:

- **Access** — there must be sufficient space to enable cable connections to the product, avoiding tight bends in the cable.
- **Diagnostics** — the product must be mounted in a location where the diagnostics LED is easily visible.

Note:
Not all products include a diagnostics LED. For more information, refer to the following section: **p.64 — System checks and troubleshooting**

- **Electrical interference** — the product should be mounted far enough away from any equipment that may cause interference such as motors, generators and radio transmitters / receivers.
- **Magnetic compass** — refer to the *Compass safe distance* section in this document for advice on maintaining a suitable distance between this product and any compasses on your vessel.
- **Power** — to keep cable runs to a minimum, the product must be located as close as possible to the vessel's dc power supply.
- **Mounting surface** — ensure the product is adequately supported on a secure surface. Refer to the weight information provided in the *Technical specification* for this product and ensure that the intended mounting surface is suitable for bearing the product weight. Do NOT mount units or cut holes in places which may damage the structure of the vessel.

6.3 Camera location requirements

When planning the installation location, consider the following points:

- The camera is waterproof, and appropriate for above decks mounting.
- Install the camera more than 2 m (6.6 ft) from the path of a radar beam. A radar beam can normally be assumed to spread 20 degrees above and below the radiating element.
- When mounting the camera in the ball-down (upside down) position, ensure that the camera is fitted to a weather-tight, flat and stiff mounting surface, with no open air exposure. For comprehensive installation instructions, refer to: **p.31 — Camera mounting**
- When mounting the camera in the ball-down (upside down) position, ensure that the camera is installed with adequate drainage so that standing water does not collect in the base. For comprehensive installation instructions, refer to: **p.31 — Camera mounting**
- Ensure the camera is installed in a location that will allow it to be accessed for regular periodic cleaning (fresh-water rinse) and for inspection of mounting point integrity and mechanical soundness.
- The underside (inside) of the compartment or deck on to which the camera is mounted must be weather-tight. You must ensure protection from water ingress, fouling and sun damage to cables and connections. If a cutout is required in the mounting surface to accommodate the cables, and it is not possible to ensure a weather-tight and protected environment, consider mounting the camera using the supplied riser and routing the cables through the riser sidewall. An optional removable hatched area

is provided for this purpose. For more information, refer to: **p.27 — Mounting preparation**

- The mounting surface must be horizontal.
- If you cannot access both sides of the mounting surface, then you will need to mount the camera "top down", using the mounting riser supplied with the camera.
- The camera should be mounted as high as practical, but without interfering with any radar, navigational, or communications electronics.
- Choose a location that will provide the most unobstructed view in all directions.
- Choose a location as close to the vessel's center line as possible. This provides a symmetrical view when looking forward or aft.
- Select a location for the camera that is at least 1 m (3.3 ft) from any magnetic compass.
- Select a location that is at least 1 m (3.3 ft) from devices that may cause interference, such as motors, generators and radio transmitters / receivers.
- If installing an optional Joystick Control Unit (JCU), select a location for the JCU that is at least 1 m (3.3 ft) from any magnetic compass.

Note:
If you want to make cable connections to the camera before mounting it to your vessel (for example, to test the camera), first attach the 3 threaded studs to the base; refer to: **p.31 — Camera mounting**
Fitting the threaded studs will help to protect the cable connectors on the base of the camera, and also provides a stable platform, helping to prevent damage caused by the unit rolling off the edge of the work surface.

6.4 EMC installation guidelines

FLIR equipment and accessories conform to the appropriate Electromagnetic Compatibility (EMC) regulations, to minimize electromagnetic interference between equipment and minimize the effect such interference could have on the performance of your system.

Correct installation is required to ensure that EMC performance is not compromised.

Note:
In areas of extreme EMC interference, some slight interference may be noticed on the product. Where this occurs the product and the source of the interference should be separated by a greater distance.

For **optimum** EMC performance we recommend that wherever possible:

- FLIR equipment and cables connected to it are:
  - At least 1 m (3.3 ft) from any equipment transmitting or cables carrying radio signals e.g. VHF radios, cables and antennas. In the case of SSB radios, the distance should be increased to 2 m (6.6 ft).
  - More than 2 m (6.6 ft) from the path of a radar beam. A radar beam can normally be assumed to spread 20 degrees above and below the radiating element.
- The product is supplied from a separate battery from that used for engine start. This is important to prevent erratic behavior and data loss which can occur if the engine start does not have a separate battery.
- FLIR specified cables are used.
- Cables are not cut or extended, unless doing so is detailed in the installation manual.

Note:
Where constraints on the installation prevent any of the above recommendations, always ensure the maximum possible separation between different items of electrical equipment, to provide the best conditions for EMC performance throughout the installation.

6.5 Compass safe distance

To prevent potential interference with the vessel's magnetic compasses, ensure an adequate distance is maintained from the product.

When choosing a suitable location for the product, you must aim to maintain a distance of **at least** 1 m (3.3 ft.) in all directions from any compasses.

For some smaller vessels it may not be possible to locate the product this far away from a compass. In this situation, when choosing the installation location for your product, ensure that the compass is not affected by the product when it is in a powered on state.

CHAPTER 7: MOUNTING PREPARATION

CHAPTER CONTENTS

- 7.1 Tools required (page 28)
- 7.2 Camera orientation (page 28)
- 7.3 Routing cables through the riser's sidewall (page 29)

7.1 Tools required

The following tools are required for installation:

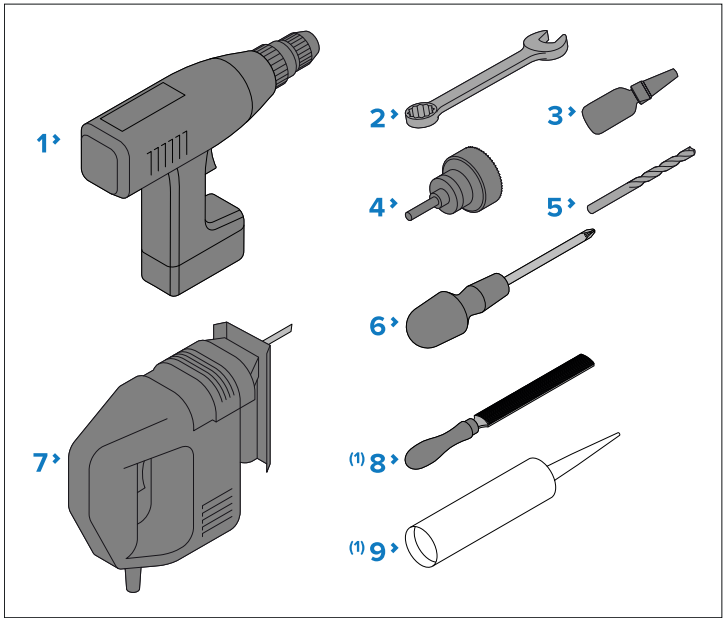

1. Drill.
2. 10 mm (0.39 in.) spanner.
3. Thread-lock.
4. 50 mm (2 in.) Hole saw.
5. Drill bit (appropriate size dependent on thickness and material of mounting surface).
6. Pozi-drive screwdriver.
7. Jigsaw.
8. **(1)** Half round file (or sandpaper) / Rotary tool.
9. **(1)** Marine grade sealant.

Note:
(1) Items are only required when removing the optional riser sidewall hatch. For more information, refer to the *Removing the riser sidewall hatch* section.

7.2 Camera orientation

The camera can be mounted in 2 orientations informally known as "Ball up" (upright) and "Ball down" (upside down).

- When the camera is mounted ball-up (upright), the camera is mounted on top of the mounting surface.
- When the camera is mounted ball-down (upside down), the camera is mounted below the mounting surface.

The default video image orientation is for the ball-up (upright) configuration; if the camera is to be mounted in the ball-down (upside down) configuration, then the video image must be rotated. To rotate the video image, you must either:

- Use the camera's Web browser user interface to set the appropriate option. For further information, refer to the following section: **p.57 — Web browser interface**
- Or if supported, a compatible multifunction display H.264 camera / video application. For further information, refer to the following section: **p.41 — Compatible MFDs / chartplotters**

Ball-down (upside down) mounting: rotating the front cover

If you intend to mount your camera in the ball-down (upside down) mode, you must first rotate the camera's front cover so that the drain hole is facing down when it is mounted.

Important:
Use caution when attempting this procedure; there is a risk of water ingress and potential resulting damage to the camera if the cover is not reassembled correctly — the drain hole MUST be facing **down** when mounting the camera upside down.

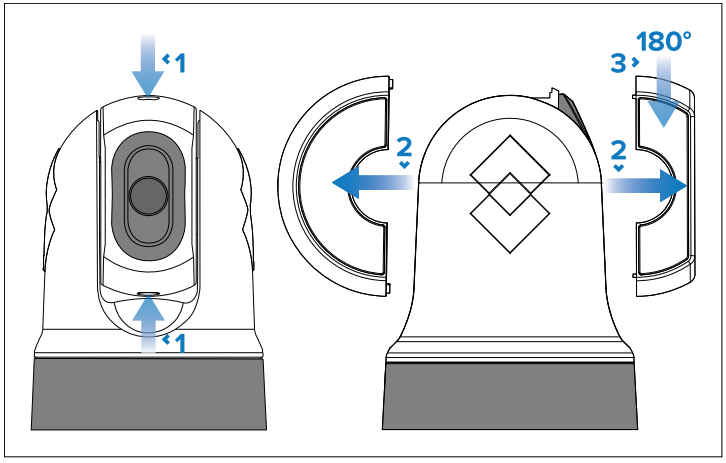

1. Press and hold the two locking buttons, as shown above.
2. With the locking buttons held, pull the front and rear covers away from one another.
3. Rotate the front cover 180° **so that the drain hole is facing down when the camera is mounted upside down**.
4. Reassemble by pushing the front and rear covers together.

Ensure that the covers are reassembled using the correct orientation, and that the drain hole is facing down.

7.3 Routing cables through the riser's sidewall

Ideally, the camera's cables should be routed through a mounting surface cutout which is weather-tight and protected from water ingress, fouling and sun damage. However, if this is not possible, the cables can alternatively be routed through the riser's sidewall. An optional 20 mm (0.79 in) wide, removable hatched area is provided on the riser for this purpose.

Use the following instructions to remove the riser's sidewall hatched area.

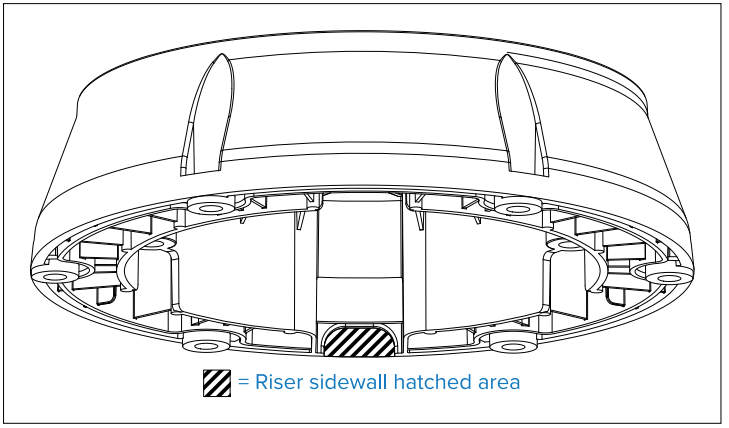

1. On the underside of the riser, mark the 20 mm (0.79 in) sidewall hatched area location identified on the supplied mounting template.
2. Use a half round file or a rotary tool to remove the sidewall hatched area (as identified in the illustration above), so that the wall is level with the inside lip.
3. Use a half round file and / or sandpaper to smooth any rough edges or burs on the removed area.

CHAPTER 8: MOUNTING

CHAPTER CONTENTS

- 8.1 Camera mounting (page 31)

8.1 Camera mounting

Inserting the studs into the camera base

The supplied threaded studs are provided pre-coated with threadlocker. You may need to use the supplied flat nuts to assist you in winding the studs into the camera base.

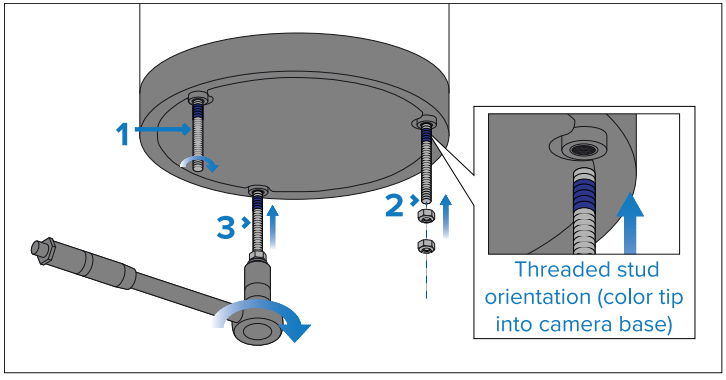

Important:
Before attempting to insert the supplied threaded studs into the camera base, ensure that the threaded studs are oriented so that the blue-colored end of each stud is inserted into the camera base (as illustrated above).

1. Insert the blue-colored end of the stud into the camera base by hand, with just enough turns to prevent it falling out.
2. Fit the 2 supplied flat nuts to the end of the stud, with just enough turns to secure the nuts.
3. Using an M6 socket wrench or spanner, securely grip the lower flat nut and then wind the stud fully into the camera base mounting holes.
4. Repeat steps 1 to 3 for each stud.
5. Once all 3 studs are fully inserted into the camera base, remove and discard the flat nuts.

Replacement threaded studs

The supplied threaded studs are provided pre-coated with threadlocker. If the supplied threaded studs are not long enough to accommodate all the fixings and the thickness of the mounting surface, obtain longer replacement **marine-grade stainless steel** M6 threaded studs (e.g. 316/A4), and apply a suitable threadlocker (e.g. “Loctite 243”), to all replacement studs.

Once the replacement studs are inserted, clean any excess threadlocker from the studs and base, and then allow the threadlocker to cure for 24 hours before proceeding with the installation.

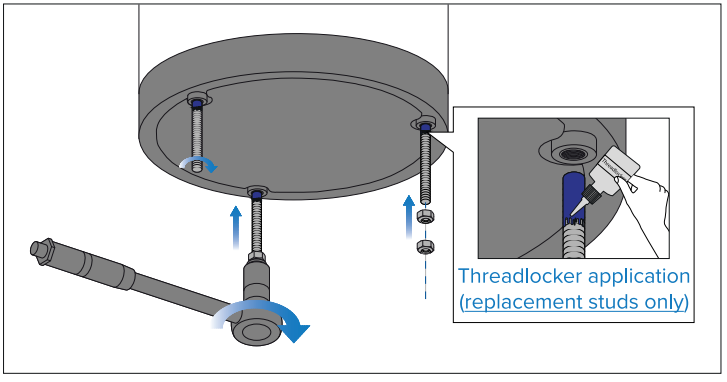

Mounting the camera ball-up

Ball-up mounting without riser

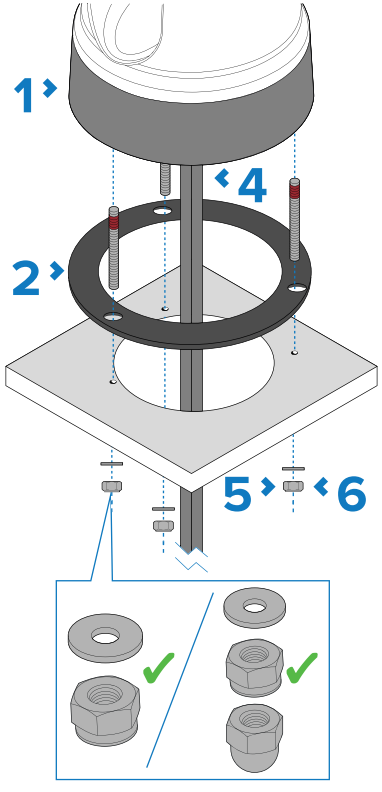

Ball-up mounting with riser (through surface cabling)

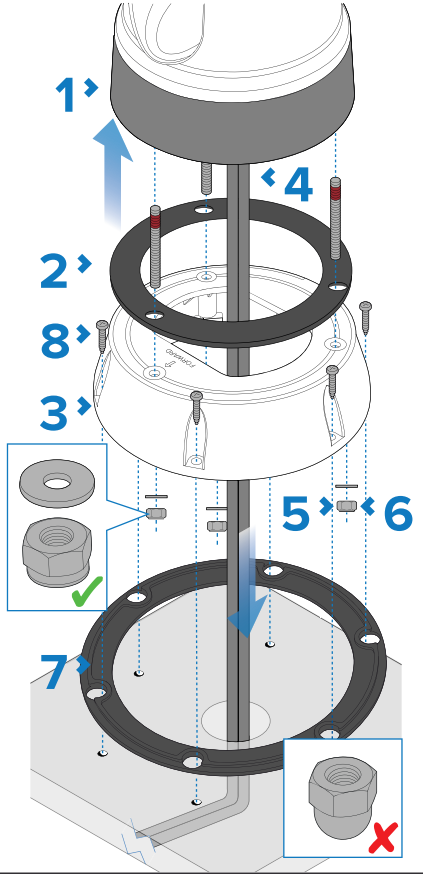

Ball-up mounting with riser (through sidewall cabling)

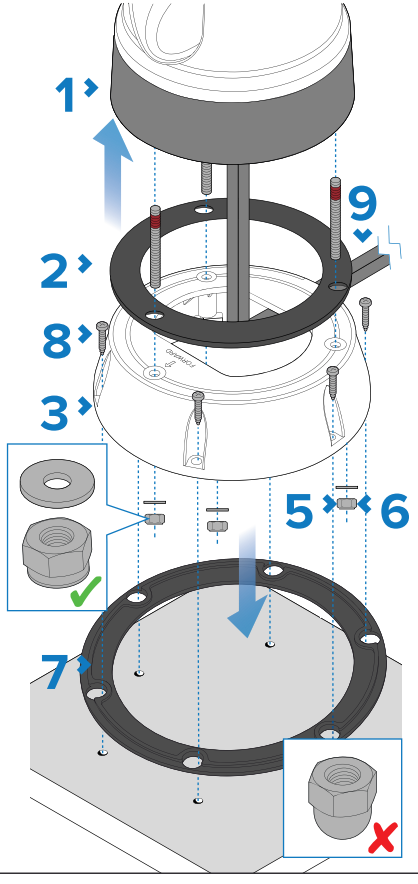

Use these instructions to mount the camera unit in the “Ball-up” (upright) mounting position.

Note:

• The 2 supplied flat nuts must only be used to assist in winding the studs into the camera's base. For more information, refer to: **p.31 — Inserting the studs into the camera base**

• Ensure that the supplied threaded studs have been installed in the correct orientation, as shown in the following section: **p.31 — Inserting the studs into the camera base**

• If required, you can fit the supplied dome nuts to the studs in order to cover exposed ends. **Do NOT** use dome nuts with a riser.

1. Use the supplied mounting template to drill the holes for the camera base (or riser, if used), and the cables.
2. Place the camera seal on the bottom of the camera, carefully aligning the seal holes with the threaded studs.

Note:
If you are mounting the camera in the ball-down (upside down) position, do NOT fit the camera seal between the camera and the riser.

3. Optionally, (temporarily) secure the riser to the camera with a few hand turns of the nyloc nuts on the studs, to prevent the riser from falling while you connect the cables. Check that the camera seal remains firmly in place.

Note:
Observe the camera forward marking on the top surface of the riser. You must ensure that the riser is mounted so that the camera is orientated properly, relative to the vessel's bow.

4. Connect the cables to the camera. If using the riser, either:
   - Loop the cables round within the riser base so that they can be threaded through the bottom of the riser and into the cable routing hole drilled in the mounting surface; or:
   - Loop the cables round within the riser base so that they can be threaded through the removed riser sidewall hatched area. For more information on how to remove the sidewall hatch, refer to: **p.29 — Routing cables through the riser's sidewall**
5. Secure the camera assembly to the mounting surface (or riser, if used), using the supplied flat washers and nyloc nuts. Pay careful attention to the correct arrangement of the fixings, as shown in the image above.

Note:
If you are replacing an existing installed camera or have purchased an older riser, do NOT use the existing spring washers supplied with the camera or riser.

6. **Tighten the nyloc nuts to a torque of 5.0 to 6.0 N·m (3.7 to 4.4 lbf·ft).**
7. Fit the supplied riser base-seal to the riser.
8. Secure the riser to the mounting surface using screws suitable for the mounting surface material and thickness. (Fixings not supplied).
9. If the riser sidewall hatched area has been removed, apply an appropriate **marine-grade sealant** to the opening after cables have been routed, so that the area is weather-tight with no open air exposure.
10. Add a regular check to ensure that weight bearing mountings, risers and fixings remain secure and without signs of wear or damage to your routine vessel maintenance schedule.

Mounting the camera ball-down

Ball-down mounting without riser

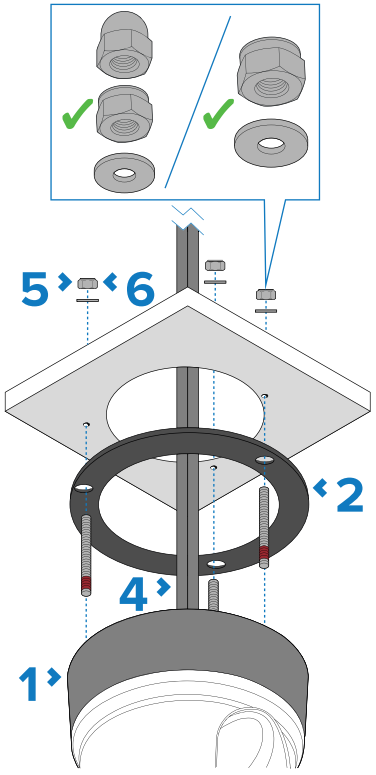

Ball-down mounting with riser (through surface cabling)

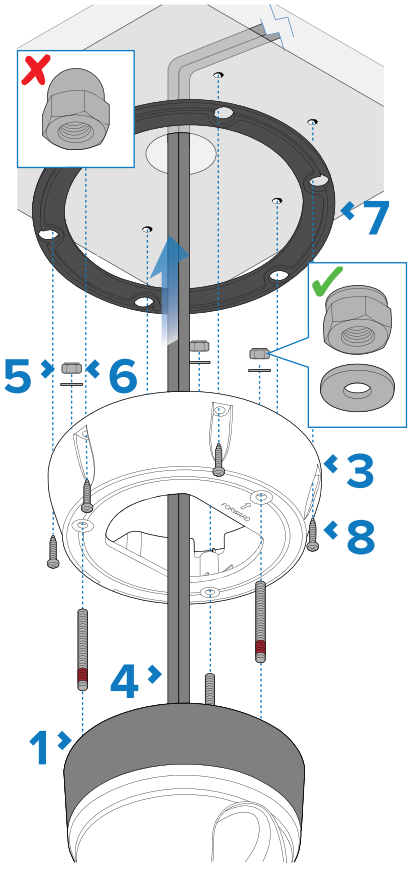

Ball-down mounting with riser (through sidewall cabling)

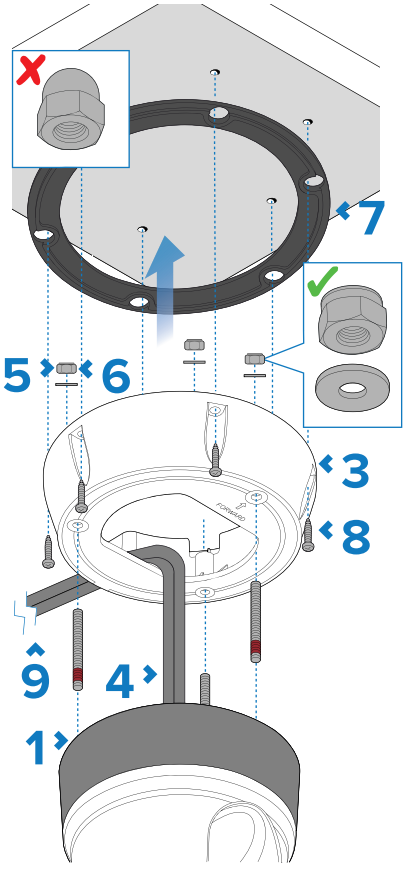

Use these instructions to mount the camera unit in the “Ball-down” (upside down) mounting position.

Note:
When installing the camera in the "Ball-down" (upside down) mounting position, the camera should be fitted to a weather-tight, flat and stiff mounting surface, with no open air exposure. If a cutout is required in the mounting surface to accommodate the cables, ensure that the underside of the camera and any connections made are protected from potential water ingress, fouling and sun damage. If this is not possible, consider mounting the camera using the supplied riser, and routing the cables through the riser sidewall. An optional 20 mm (0.79 in.) wide, removable hatched area is provided on the riser for this purpose. For more information, refer to: **p.29 — Routing cables through the riser's sidewall**

Note:

• The 2 supplied flat nuts must only be used to assist in winding the studs into the camera's base. For more information, refer to: **p.31 — Inserting the studs into the camera base**

• Ensure that the supplied threaded studs have been installed in the correct orientation, as shown in the following section: **p.31 — Inserting the studs into the camera base**

• If required, you can fit the supplied dome nuts to the studs in order to cover exposed ends. **Do NOT** use dome nuts with a riser.

1. Use the supplied mounting template to drill the holes for the camera base (or riser, if used), and the cables.
2. Place the camera seal on the bottom of the camera, carefully aligning the seal holes with the threaded studs.

Important:
If you are mounting the camera in the ball-down (upside down) position, do NOT fit the camera seal between the camera and the riser.

3. Optionally, (temporarily) secure the riser to the camera with a few hand turns of the nyloc nuts on the studs, to prevent the riser from falling while you connect the cables. Check that the camera seal remains firmly in place.

Note:
Observe the camera forward marking on the top surface of the riser. You must ensure that the riser is mounted so that the camera is orientated properly, relative to the vessel's bow.

4. Connect the cables to the camera. If using the riser, either:
   - Loop the cables round within the riser base so that they can be threaded through the bottom of the riser and into the cable routing hole drilled in the mounting surface; or:
   - Loop the cables round within the riser base so that they can be threaded through the removed riser sidewall hatched area. For more information on how to remove the sidewall hatch, refer to: **p.29 — Routing cables through the riser's sidewall**
5. Secure the camera assembly to the mounting surface (or riser, if used), using the supplied flat washers and nyloc nuts. Pay careful attention to the correct arrangement of the fixings, as shown in the image above.

Important:
If you are replacing an existing camera installation or have purchased an older riser, do NOT use the existing spring washers supplied with the camera or riser.

6. **Tighten the nyloc nuts to a torque of 5.0 to 6.0 N·m (3.7 to 4.4 lbf·ft).**
7. Fit the supplied riser base-seal to the riser.
8. Secure the riser to the mounting surface using screws suitable for the mounting surface material and thickness. (Fixings not supplied).
9. If the riser sidewall hatched area has been removed, apply an appropriate **marine-grade sealant** to the opening after cables have been routed, so that the area is weather-tight with no open air exposure.
10. Add a regular check to ensure that weight bearing mountings, risers and fixings remain secure and without signs of wear or damage to your routine vessel maintenance schedule.

CHAPTER 9: CONNECTIONS OVERVIEW

CHAPTER CONTENTS

- 9.1 Connections overview (page 37)
- 9.2 Video connections (page 37)
- 9.3 Connecting cables (page 38)
- 9.4 Orientation of right-angled connectors (page 38)
- 9.5 General cabling guidance (page 38)

9.1 Connections overview

Camera physical connections.

Thermal camera connectors:

Connector	Suitable connections
Network: 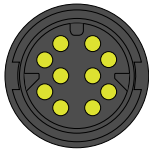	**Connects to an RJ45 connector on:** • A network switch. • A PC / laptop computer. • An IP video decoder (available separately from third-party retailers). **Connects to a RayNet (Ethernet) connector on:** • A network switch. • A compatible multifunction display (MFD) / chartplotter. **Suitable cables:** • RayNet (Ethernet) to RJ45 adapter cable (supplied). • Right-angled RayNet (Ethernet) to RayNet (Ethernet) cable (supplied). For further information on the available cables, refer to: **p.70 — Spares and Accessories**
Power and drain: 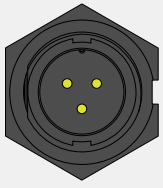	**Connects to a:** • 12 / 24 V dc power supply. **Suitable cables:** • Right-angled power cable (supplied).

Note:
The supplied right-angled RayNet (Ethernet) and Power cables are suitable for mounting on surfaces up to 25.4 mm (1.0 in) thick. When mounting on thicker surfaces, you may need to use RayNet (Ethernet) and Power cables with straight connectors (available separately).

Note:
The cables should be routed to a dry area of the vessel for connection. Alternatively, you must ensure that all connections are water tight.

Note:
If you want to make cable connections to the camera before mounting it to your vessel (for example, to test the camera), first attach the 3 threaded studs to the base. For further information, refer to: **p.31 — Inserting the studs into the camera base**
This will help to protect the cable connectors on the base of the camera, and also provides a stable platform, helping to prevent damage caused by the unit rolling off the edge of the work surface.

9.2 Video connections

Details of the video output available via the camera's RayNet (Ethernet) connector.

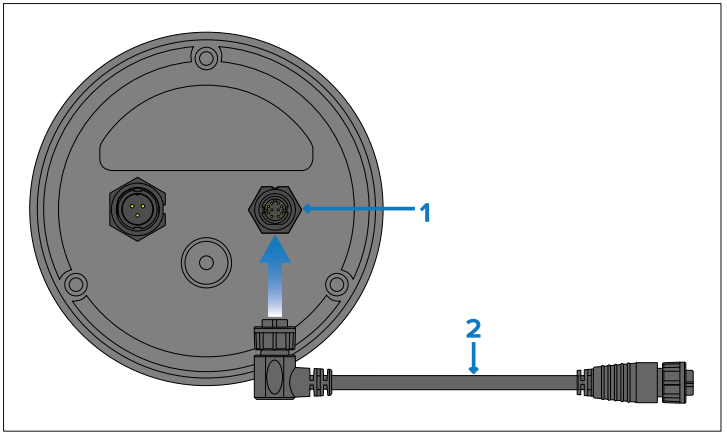

1. Network connector — provides IP streaming video and camera control, over a RayNet (Ethernet) connection.

For more information on the devices you can connect to for camera control and video display, refer to:
p.15 — Product and system overview

2. Right-angled RayNet (Ethernet) cable, 10 m (32.8 ft.), supplied.

For the IP video encoding format and resolution supported by the camera, refer to: **p.69 — Video specification**

Note:
It is also possible to convert the IP digital video stream to an analog video signal for displaying the camera's video feed on an analog video display, by using a suitable IP video decoder (available separately from third-party retailers).

9.3 Connecting cables

Follow the steps below to connect the cable(s) to your product.

1. Ensure that the vessel's power supply is switched off.
2. Ensure that the device being connected has been installed in accordance with the installation instructions supplied with that device.
3. Ensuring correct orientation, push cable connectors fully onto the corresponding connectors.
4. Engage any locking mechanism to ensure a secure connection (e.g.: turn locking collars clockwise until tight, or in the locked position).
5. Ensure any bare ended wire connections are suitably insulated to prevent shorting and corrosion due to water ingress.

9.4 Orientation of right-angled connectors

When making connections using the supplied right-angled power and network cables, ensure that you orient the connectors correctly with respect to the thermal camera base.

Viewed from the camera base, with the label uppermost, the right-angled power and network cables both leave the camera to the right, as illustrated.

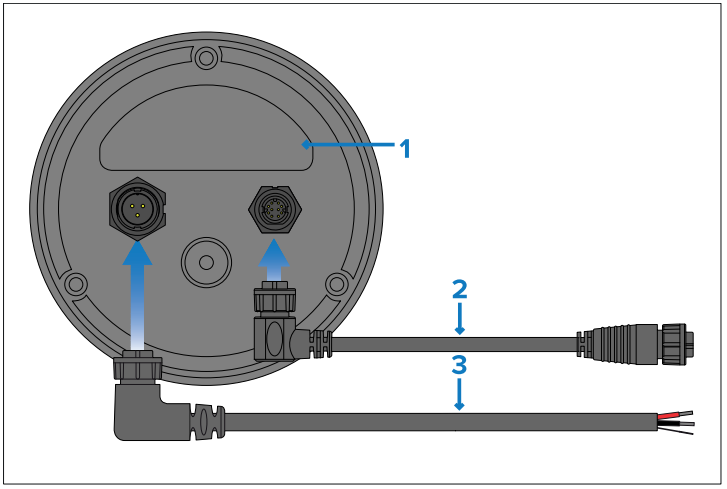

1. Label on camera base.
2. Network cable with right-angled connector.
3. Power cable with right-angled connector.

9.5 General cabling guidance

Cable types and length

It is important to use cables of the appropriate type and length.

- Unless otherwise stated use only standard cables of the correct type, supplied by FLIR.
- Ensure that any non-FLIR cables are of the correct quality and gauge. For example, longer power cable runs may require larger wire gauges to minimize voltage drop along the run.

Cable routing and bend radius

To maximize cable performance and lifespan, it's important to ensure that all cables are routed correctly and adequate space is provided to allow for each cable's minimum bend radius.

Minimum cable bend radius

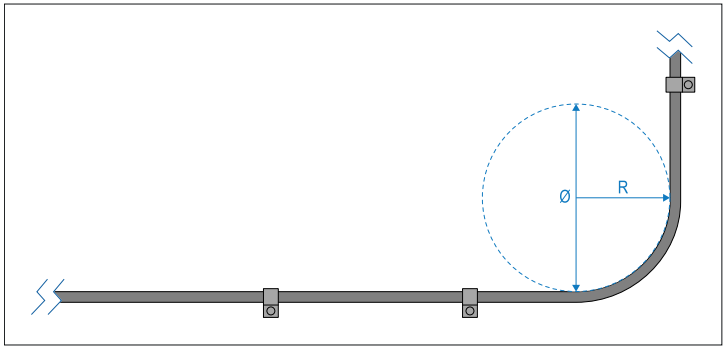

Do NOT bend cables excessively. Wherever possible, ensure that your chosen product installation location allows enough clearance for the minimum cable bend diameter specified in the following table:

	Description	Value
Ø	Cable minimum bend **diameter**.	200 mm (7.87 in.)
R	Cable minimum bend **radius**.	100 mm (3.94 in.)

Note:
For products where multiple different cable types are connected, each with a different minimum cable bend radius, the higher figure is provided in the table above (i.e. the cable with the greatest minimum bend radius is specified).

Cable routing — best practices

- Protect all cables from physical damage and exposure to heat. Use trunking or conduit where possible. Do NOT run cables through bilges or doorways, or close to moving or hot objects.
- Secure cables in place using cable clips or cable ties. Coil any excess cable and tie it out of the way.
- Where a cable passes through an exposed bulkhead or deckhead, use a suitable watertight feed-through (conduit).
- Do NOT run cables near to engines or fluorescent lights.
- Always route data cables as far away as possible from:
  - Other equipment and cables.
  - High current-carrying AC and DC power lines.
  - Antennas.

Strain relief

Use adequate strain relief for cabling to ensure that connectors are protected from strain and will not pull out under extreme sea conditions.

Circuit isolation

Appropriate circuit isolation is required for installations using both AC and DC current:

- Always use isolating transformers or a separate power-inverter to run PCs, processors, displays and other sensitive electronic instruments or devices.
- If using Weather FAX audio cables, always use an isolating transformer.
- If using a third-party audio amplifier, always use an isolated power supply.
- If using an RS232/NMEA converter, always ensure optical isolation on the signal lines.
- Always ensure that PCs or other sensitive electronic devices have a dedicated power circuit.

Cable shielding

Ensure that cable shielding is not damaged during installation and that all cables are properly shielded.

Important:
Be aware that some **third-party** cables and adapters (for example, certain Ethernet cables using RJ45 connectors) are not always shielded. To prevent breaks in cable shielding continuity and potential grounding issues, special attention is required to ensure that any cables, extension cables, adapters, or other signal-coupling devices used in cable runs **maintain all shield connections throughout the cable run**.

CHAPTER 10: NETWORK CONNECTIONS

CHAPTER CONTENTS

- 10.1 Network connections (page 41)
- 10.2 Power over Ethernet (PoE) (page 41)
- 10.3 PoE isolation coupler (page 41)
- 10.4 Network cable connector types (page 41)
- 10.5 Compatible MFDs / chartplotters (page 41)
- 10.6 Network connection examples (page 42)

10.1 Network connections

Your camera has a single RayNet (Ethernet) network connector. This connects the camera to your vessel's wider IP network, such as to an existing Ethernet network.

The specific details of the network connections between the camera, video display (Web browser, video monitor, or compatible multifunction display (MFD) / chartplotter), Joystick Control Unit (for example, a JCU-4) and the rest of your installation will depend on:

- How you want to control the camera (for example, using a Web browser, an MFD / chartplotter with an H.264-compatible video application, a JCU controller, or a combination of these).
- How you want to view the camera's IP video feed (for example, via a laptop / PC, a compatible MFD / chartplotter, or a combination of these).
- The equipment already installed on your vessel (for example, network switches with free ports, or other cameras).

The following sections show some possible network connections, starting with a basic system with a single camera directly connected to Web browser, and finishing with a more complex multi-camera, multi-display, multi-JCU system.

Important:
If you are powering a JCU via the separately-available PoE Injector (2nd Generation; 5 Gbit) (A80811), do NOT connect the power input labelled "*VIN1+*" on the PoE Injector.

Note:
Power connections are not shown throughout each of the following illustrations. For power connection information, refer to the instructions which accompany each device.

Note:
An Ethernet network switch is only required in the provided example scenarios when the camera needs to be connected to more than one Ethernet device. For a high speed connection, ensure that equipment is connected to your network switch via an available Gigabit (GBit)-speed port.

10.2 Power over Ethernet (PoE)

Power over Ethernet (PoE) is a system which allows both power and data to be passed along a single CAT 6 Ethernet cable.

There are 2 main types of PoE device:

- **Power Sourcing Equipment (PSE)** — this **PoE** system component provides electrical power over a CAT 6 **Ethernet** cable.
- **Powered Device (PD)** — this **PoE** system component is powered by the electrical power provided by the Power Sourcing Equipment (PSE).

10.3 PoE isolation coupler

Some networks require an inline Power over Ethernet (PoE) isolation coupler to be fitted before the camera can be connected to the network.

The inline PoE isolation coupler may be required regardless of whether a network device (e.g. an MFD / chartplotter, or network switch) outputs PoE or not.

Before connecting the camera to a network, refer to your network device manufacturer for more information.

10.4 Network cable connector types

There are 2 types of applicable network cable connectors which are supplied with your product — RayNet (Ethernet) and RJ45.

Connector	Description
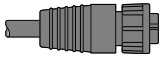	RayNet (Ethernet)
	RJ45

10.5 Compatible MFDs / chartplotters

Some multifunction displays (MFDs) / chartplotters may support camera control options via an H.264-compatible video / camera application. The range of control options available is dependent on the support that the MFD / chartplotter manufacturer has

implemented for the dedicated video / camera application. Refer to the MFD / chartplotter manufacturer for information on whether your display is compatible with the camera.

The image streamed via the camera's RayNet (Ethernet) connector can also be viewed on any MFD / chartplotter featuring a Web browser. The on-screen controls displayed in the Web browser will enable you to perform basic camera control operations from your MFD / chartplotter, including pan / tilt functions and setting menu changes (dependent on camera variant).

Note:
It is recommended that you use a dedicated video / camera application in order to:

- View a higher quality camera video feed (using the H.264 video codec).
- Avoid Web browser session expiration.

10.6 Network connection examples

The camera can be integrated with a wide range of existing electronic systems, which may or may not already include a RayNet (Ethernet) network or a compatible multifunction display / chartplotter.

The following examples show possible network connections for:

1. A single-camera system with the camera connected directly to a laptop or other device running a web browser (for camera control, and viewing the camera's IP video feed).
2. A single-camera system comprising a laptop or another device running a web browser (for camera control, and viewing the camera's IP video feed), an Ethernet network switch, and an optional JCU (available separately) for additional camera control.
3. A single-camera system comprising an analog video monitor connected via an IP video decoder (available separately from third-party retailers), an Ethernet network switch, and a JCU (available separately) for camera control.
4. A single-camera system comprising a compatible multifunction display / chartplotter (for camera control, and viewing the camera's video feed), an Ethernet network switch, and a JCU (available separately) for additional camera control.
5. A multi-camera system comprising an analog video monitor connected via an IP video decoder (available separately from third-party retailers), 2 compatible multifunction displays / chartplotters, 2 Ethernet network switches, 2 JCUs (available separately), and a laptop (web browser) for additional camera control.

Note:
Power connections are not shown throughout each of the following illustrations. **For power connection information, refer to the instructions which accompany each device.**

Camera system with direct connection to a Web browser

The network connection scenario illustrated below is primarily intended for configuration and diagnostic purposes.

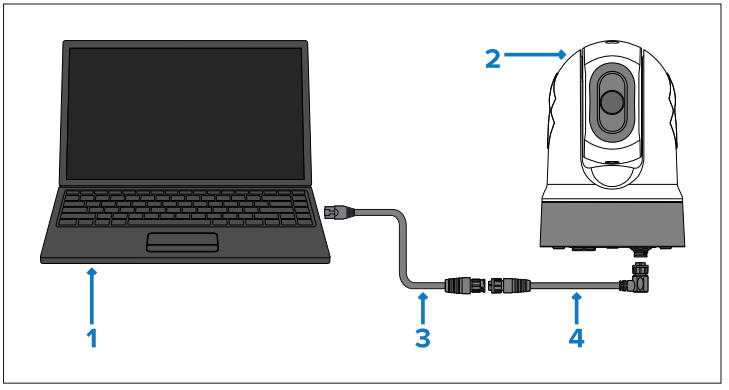

	Description
1	Laptop (or another Ethernet-connected device running a Web browser), available separately from third-party retailers
2	Camera
3	RayNet (Ethernet) to RJ45 adapter cable (100 mm (3.9 in)), 1x supplied with camera
4	Right angled RayNet (Ethernet) to RayNet (Ethernet) cable (10 m (32.8 ft.)), 1x supplied with camera

Camera system with a Web browser and an optional JCU

The network connection scenario illustrated below is primarily intended for configuration and diagnostic purposes.

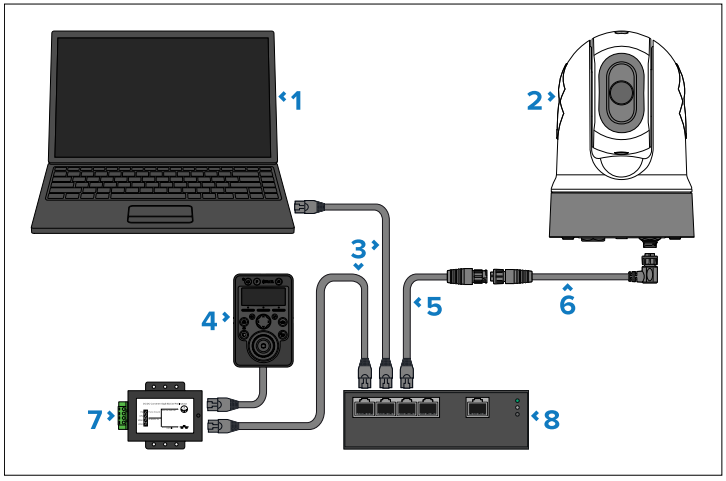

	Description
1	Laptop (or another Ethernet-connected device running a Web browser), available separately from third-party retailers
2	Camera
3	RJ45 to RJ45 Ethernet cable, available separately
4	Joystick Control Unit (JCU-4 currently illustrated), available separately
5	RayNet (Ethernet) to RJ45 adapter cable (100 mm (3.9 in)), 1x supplied with camera
6	Right angled RayNet (Ethernet) to RayNet (Ethernet) cable (10 m (32.8 ft.)), 1x supplied with camera
7	PSE (Power Sourcing Equipment — e.g. a PoE Injector or PoE network switch) providing PoE (Power over Ethernet) to the JCU-4, available separately
8	Ethernet network switch, available separately

Camera system with a compatible MFD / chartplotter and JCU

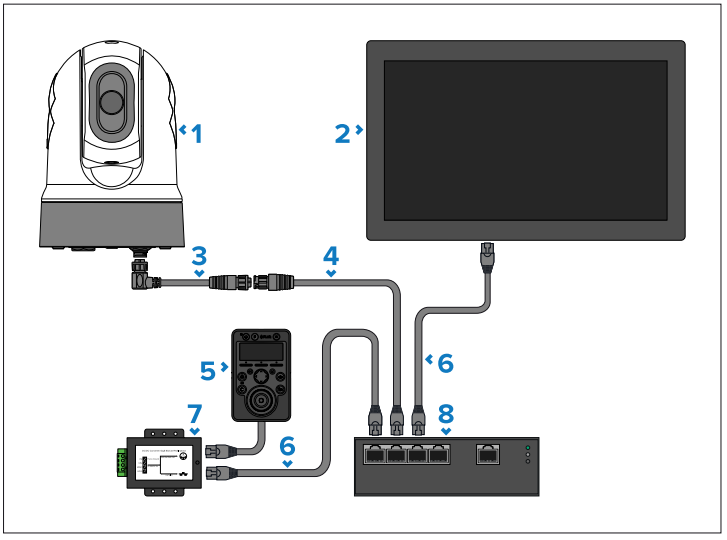

	Description
1	Camera
2	Compatible MFD / chartplotter, available separately
3	Right-angled RayNet (Ethernet) to RayNet (Ethernet) cable (10 m (32.8 ft.)), 1x supplied with camera
4	RayNet (Ethernet) to RJ45 adapter cable (100 mm (3.9 in)), 1x supplied with camera
5	Joystick Control Unit (JCU-4 currently illustrated), available separately
6	RJ45 to RJ45 Ethernet cable, available separately
7	PSE (Power Sourcing Equipment — e.g. a PoE Injector or PoE network switch) providing PoE (Power over Ethernet) to the JCU-4, available separately
8	Ethernet network switch, available separately

Single-camera system with analog video monitor and JCU

For this system, a device running a web browser is not required. The camera's IP video feed is routed through an Ethernet network switch to an IP video decoder (available separately from third-party retailers), and displayed on an analog video monitor. Camera control is provided by a JCU (available separately).

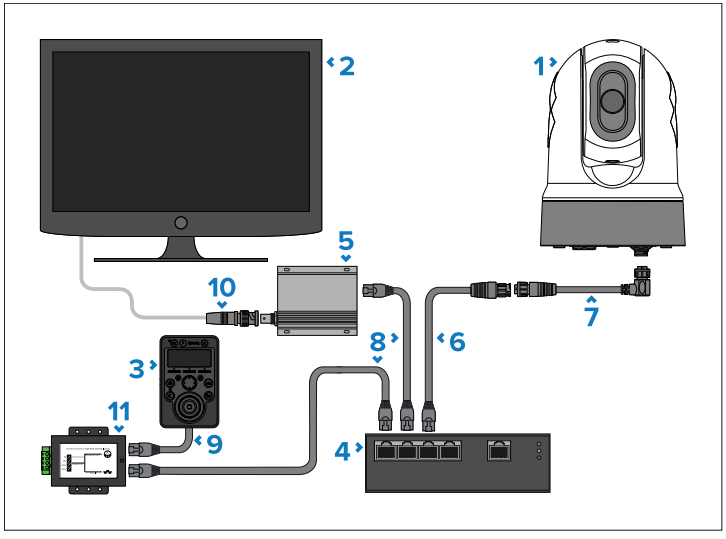

	Description
1	Camera
2	Analog video monitor, available separately from third-party retailers
3	Joystick Control Unit (JCU-4 currently illustrated), available separately
4	Ethernet network switch, available separately
5	IP video decoder, available separately from third-party retailers
6	RayNet (Ethernet) to RJ45 adapter cable (100 mm, 3.94 in), 1x supplied with camera
7	Right-angled RayNet (Ethernet) to RayNet (Ethernet) cable, 10 m (32.8 ft), 1x supplied with camera
8	RJ45 to RJ45 Ethernet cable
9	RayNet (Ethernet) to RJ45 cable, available separately
10	BNC to BNC video cable, available separately
11	PoE injector (provides power to JCU-4), available separately

Multi-camera system with a video monitor, 2 compatible MFDs / chartplotters, 2 JCUs, and a web browser

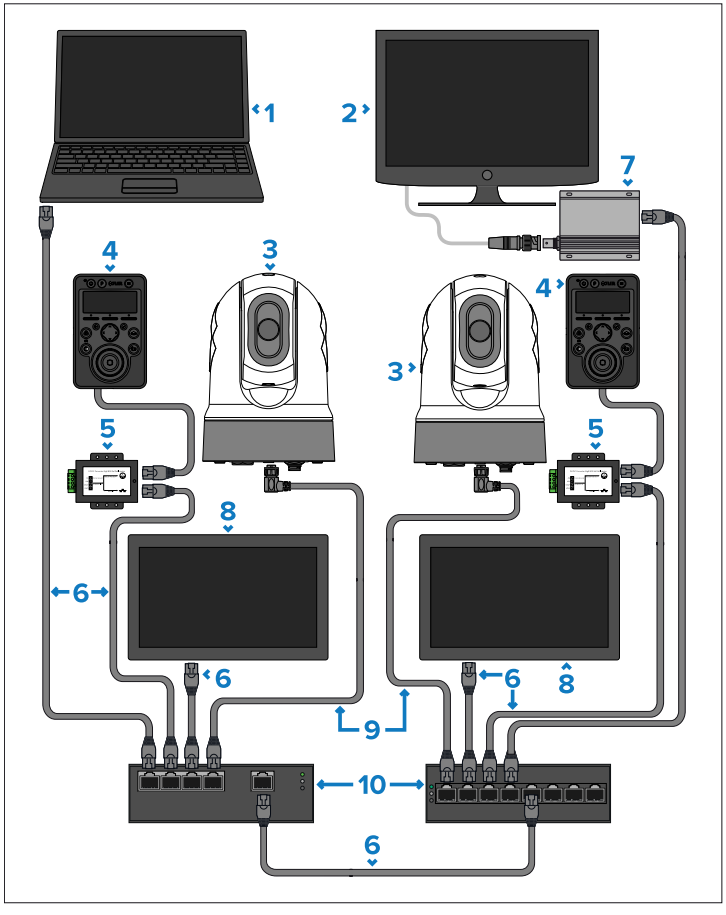

	Description
1	Laptop (or another Ethernet-connected device running a Web browser), available separately from third-party retailers
2	Analog video monitor, available separately from third-party retailers
3	Camera
4	Joystick Control Unit (JCU-4 currently illustrated), available separately
5	PSE (Power Sourcing Equipment — e.g. a PoE Injector or PoE network switch) providing PoE (Power over Ethernet) to the JCU-4, available separately
6	RJ45 to RJ45 Ethernet cable, available separately
7	IP video converter, available separately from third-party retailers
8	Compatible MFD / chartplotter, available separately
9	Right-angled RayNet (Ethernet) to RJ45 cable, available separately
10	Ethernet network switch, available separately

CHAPTER 11: POWER CONNECTIONS

CHAPTER CONTENTS

- 11.1 Power connection (page 47)
- 11.2 Inline fuse and thermal breaker ratings (page 47)
- 11.3 Power distribution (page 47)
- 11.4 Power cable extension (12 / 24 V systems) (page 49)
- 11.5 Power cable drain wire connection (page 50)
- 11.6 Positive ground systems (page 50)

11.1 Power connection

Power must be supplied to the camera from an appropriate power source.

Power connection requirements

- 12 or 24 V dc nominal supply voltage
- Isolated power supply
- Connected via an appropriately-rated thermal breaker or fused switch (refer to *Inline fuse and thermal breaker ratings*).

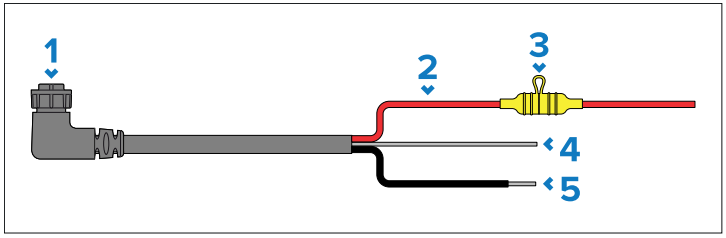

	Description
1	*Right-angled 3-pin power cable (10 m).
2	Red wire (positive) — connects to the power supply's positive terminal.
3	Waterproof fuse holder containing a suitably-rated inline fuse (**not supplied**), which must be fitted to the red positive wire — refer to the fuse ratings below.
4	Gray wire (drain) — connects to the vessel RF ground (if available), or the negative battery terminal.
5	Black wire (negative) — connects to the power supply's negative terminal.

*The supplied right-angled RayNet (Ethernet) and Power cables are suitable for mounting on surfaces up to 25.4 mm (1.0 in.) thick. When mounting on thicker surfaces, you may need to use RayNet (Ethernet) and Power cables with straight connectors (available separately).

11.2 Inline fuse and thermal breaker ratings

The following inline fuse and thermal breaker ratings apply to your product:

Inline fuse rating	Thermal breaker rating
5A slow blow	5A (if only connecting one device)

Note:

- The suitable fuse rating for the thermal breaker is dependent on the number of devices you are connecting. If in doubt, consult an authorized dealer.
- Your product's power cable may be supplied with a fitted inline fuse (depending on product variant). If not, you must add an inline fuse (rated as stated above) to the positive wire of your product's power connection.

11.3 Power distribution

Recommendations and best practice for the power connection of products supplied with a drain wire as part of the supplied power cable.

- The product is supplied with a power cable, either as a separate item or a captive cable permanently attached to the product. Only use the power cable supplied with the product. Do NOT use a power cable designed for, or supplied with, a different product.
- Refer to the *Power connection* section for more information on how to identify the wires in your product's power cable, and where to connect them.
- See below for more information on implementation for some common power distribution scenarios:

Important:

- When planning and wiring, take into consideration other products in your system, some of which (e.g. sonar modules) may place large power demand peaks on the vessel's electrical system, which may impact the voltage available to other products during the peaks.
- The information provided below is for guidance only, to help protect your product. It covers common vessel power arrangements, but does NOT cover every scenario. If you are unsure how to provide the correct level of protection, please consult an authorized dealer or a suitably qualified professional marine electrician.

Implementation — connection to distribution panel (Recommended)

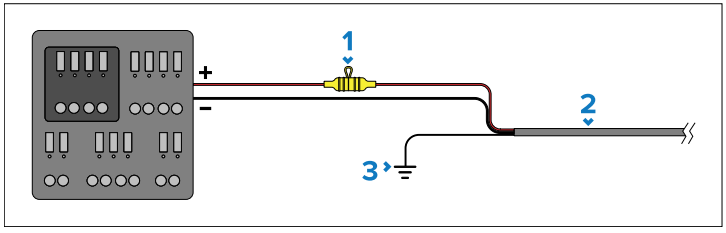

	Description
1	Waterproof fuse holder containing a suitably-rated inline fuse must be fitted. For suitable fuse rating, refer to: *Inline fuse and thermal breaker ratings*.
2	Product power cable.
3	Drain wire connection point.

- It is recommended that the supplied power cable is connected to a suitable breaker or switch on the vessel's distribution panel or factory-fitted power distribution point.
- The distribution point should be fed from the vessel's primary power source by 8 AWG (8.36 mm^2) cable.
- Ideally, all equipment should be wired to individual suitably-rated thermal breakers or fuses, with appropriate circuit protection. Where this is not possible and more than 1 item of equipment shares a breaker, use individual inline fuses for each power circuit to provide the necessary protection.
- The power cable supplied with your product includes a drain wire, which must be connected to the vessel's common RF ground.

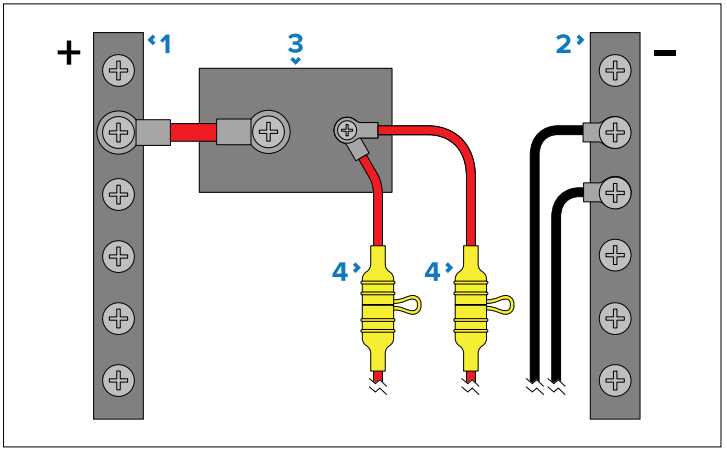

	Description
1	Positive (+) bar
2	Negative (-) bar
3	Circuit breaker
4	Waterproof fuse holder containing a suitably-rated inline fuse must be fitted. For suitable fuse rating, refer to: *Inline fuse and thermal breaker ratings*.

Important:
Observe the recommended fuse / breaker ratings provided in the product's documentation, however be aware that the suitable fuse / breaker rating is dependent on the number of devices being connected.

Implementation — direct connection to battery

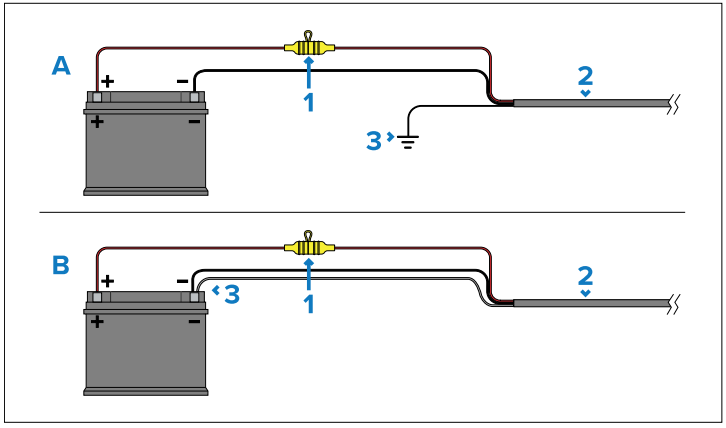

- Where connection to a power distribution panel is not possible, the power cable supplied with your product may be connected directly to the vessel's battery, via a suitably rated fuse or breaker.
- If the power cable is NOT supplied with a fitted inline fuse, you MUST fit a suitably rated fuse or breaker between the red wire and the battery's positive terminal.
- Refer to the inline fuse ratings provided in the product's documentation.
- If you need to extend the length of the power cable supplied with your product, ensure you observe the dedicated *Power cable extensions* advice provided in the product's documentation.

	Description
1	Waterproof fuse holder containing a suitably-rated inline fuse must be fitted. For suitable fuse rating, refer to: *Inline fuse and thermal breaker ratings*.
2	Product power cable.
3	Drain wire connection point.

Battery connection scenario A:
Suitable for a vessel with a common RF ground point. In this scenario, the power cable's drain wire should be connected to the vessel's common ground point.
Battery connection scenario B:
Suitable for a vessel without a common grounding point. In this case, the power cable's drain wire should be connected directly to the battery's negative terminal.

Grounding

Ensure that you observe any additional grounding advice provided in the product's documentation.

More information

It is recommended that best practice is observed in all vessel electrical installations, as detailed in the following standards:

- BMEA Code of Practice for Electrical and Electronic Installations in Boats
- NMEA 0400 Installation Standard
- ISO 13297: Small craft — Electrical systems — Alternating and direct current installations
- ISO 10133: Small craft — Electrical systems — Extra-low-voltage d.c. installations
- ABYC E-11 AC & DC Electrical Systems on Boats
- ABYC A-31 Battery chargers and Inverters
- ABYC TE-4 Lightning Protection

11.4 Power cable extension (12 / 24 V systems)

If you need to extend the length of the power cable supplied with your product, ensure you observe the following advice:

- The power cable for each unit in your system should be run as a separate, single length of 2-wire cable from the unit to the vessel's battery or distribution panel.
- Ensure that the extension cable is of a sufficient gauge for the supply voltage, the total current load of the device, and the length of the cable run — as the cable run length increases, the greater the voltage drop will be from one end of the power cable to the other.
- Refer to the following table for typical **minimum** power cable wire gauges:

Cable length in meters (feet)	Wire gauge in AWG (mm^2) for 12 V supply	Wire gauge in AWG (mm^2) for 24 V supply
<8 (<25)	16 (1.31 mm^2)	18 (0.82 mm^2)
16 (50)	14 (2.08 mm^2)	16 (1.31 mm^2)
24 (75)	12 (3.31 mm^2)	14 (2.08 mm^2)
>32 (>100)	10 (5.26 mm^2)	12 (3.31 mm^2)

Important:
Be aware that some products in your system (such as sonar modules) can create voltage peaks at certain times, which may impact the voltage available to other products during the peaks.

Important:
To ensure power cables (including any extension) are of a sufficient gauge, ensure that there is a continuous **minimum** voltage of **10.8 V dc** at the end of the cable where it enters the product's power connector, even with a fully flat battery at 11 V dc. (Do not assume that a flat battery is at 0 V dc. Due to the discharge profile and internal chemistry of batteries, the current drops much faster than the voltage. A "fully flat" battery still shows a positive voltage, even if it doesn't have enough current to power your device.)

11.5 Power cable drain wire connection

The power cable supplied with this product includes a dedicated drain wire for connection to a vessel's Radio Frequency (RF) ground point (if available), or the negative battery terminal.

The purpose of the drain wire is to drain excess voltage from the cable shield, giving it a path to safety. The drain wire protects the cable's inner signal conductors from electrical noise emitted by other cables and devices.

Although the drain wire is not intended to ground the product's internal circuits, it's important that the drain wire is connected to the vessel's common RF ground point, which should be used for all equipment in your system. If several items require grounding, the drain wires and dedicated ground connections (if available) of all equipment should first be connected to a single local point (e.g. within a distribution panel), and then this point connected via an appropriately-rated conductor to the vessel's RF common ground point. An RF ground point is typically a circuit with a very low-impedance signal at Radio Frequency, connected to the sea via an electrode immersed in the sea, or bonded to the inner side of the hull in an area that is underwater.

On vessels without an RF ground system, the drain wires and dedicated ground connections (if available) of all equipment should be connected directly to the vessel's negative battery terminal.

The dc power system should be either:

- Negative grounded ("bonded"), with the negative battery terminal connected to the vessel's RF ground.
- Floating, with neither battery terminal connected to the vessel's ground.

The preferred minimum requirement for the path to ground (bonded or non-bonded) is via a flat tinned copper braid, with a 30 A rating or greater. If this is not possible, an equivalent stranded wire conductor may be used, rated as follows:

- for runs of <1 m (3.3 ft), use 6 mm2 (10 AWG) or greater.
- for runs of >1 m (3.3 ft), use 8 mm2 (8 AWG) or greater.

In any grounding system, always keep the length of connecting braid or wires as short as possible.

11.6 Positive ground systems

Do NOT connect this unit to a system which has positive grounding.

CHAPTER 12: IP ADDRESS DISCOVERY

CHAPTER CONTENTS

- 12.1 Camera IP address discovery (page 52)
- 12.2 How to find an IP address (page 52)
- 12.3 Setting a static IP address (page 53)
- 12.4 Accessing the camera's web interface page (page 53)

12.1 Camera IP address discovery

Before you can access the camera's web interface page(s), you first need to know the camera's IP address. The way in which you obtain this IP address depends on: 1) **which device** in the network is allocating the IP addresses; and 2) **how** the IP network addresses are allocated. The majority of IP networks are configured to allocate IP addresses to connected devices automatically. However, on some networks, it will be necessary to configure the camera's IP address manually.

IP address allocation methods

Method	Description
Automatic: via DHCP or link local address	Certain networks will allocate an IP address for the camera automatically, via DHCP (*Dynamic Host Configuration Protocol*). Windows PCs also have *link local* support, which means that if a DHCP server is not found on the IP network, the camera will fallback to using a link local address, in the 169.254.x.x range. In this scenario, no further IP configuration is required, and you will be able to access the camera's web interface page by entering its IP address into the web browser's address bar. **How to find the camera's IP address:** Refer to: **p.52 — How to find an IP address**
Manual: via a static IP address	Networks that do NOT use DHCP or link local IP addressing require a **static IP** address to be permanently assigned to each connected device. An IP address can be assigned manually using the camera's Configuration page. However, before you can access this page and change the camera's default IP address to a static address of your choosing, you must first find out the camera's existing factory-configured IP address. **How to find the camera's IP address:** Refer to: **p.52 — How to find an IP address**

Note:
When setting a static IP address, be aware that some IP network policies impose IP address *octet filtering* rules, which may require the numbers in a specific octet of the address to be within a specific range. In this scenario, it may not be possible to assign a static IP address to the device if the address is not in the correct range, and it will be necessary to refer to the vessel's IP network administrator.

Note:
IP addresses are self-allocated by certain Raymarine equipment in the following range: 198.18.0.32 to 198.18.3.255 (inclusive). On networks featuring Raymarine-branded IP devices, you must avoid placing any devices in this range using manual (static) IP addresses.

12.2 How to find an IP address

The majority of IP networks are configured to allocate IP addresses to connected devices automatically. There are a variety of ways for discovering a device's IP address, and the method differs depending on the platform:

On a Windows PC or laptop:

Method 1:

1. Open Windows **File** Explorer, and click on the "*Network*" category in the sidebar on the left.
2. Find the relevant device via its serial number in the list of devices, and then right-click on its icon and select "*Properties*".
3. The IP address will be listed in the displayed web page.

Method 2:
Use third-party IP scanning software (such as *Wireshark*) to scan the devices on your IP network. The IP address of all devices will be listed in the scan results.

On a network router connected to the same IP network:

1. Access the router's web interface page via a web browser (the router's IP address is typically *192.168.1.1* or *192.168.0.1*). It is also usually printed on the Router's product label.
2. Navigate to the "*Device List*", "*Connected Devices*", or "*DHCP Clients*" section.
3. The connected IP devices and their IP addresses will be listed.

On an chartplotter:

The IP address for connected devices is usually displayed on a *Diagnostics* page. Refer to the display's *Operation Instructions* document for instructions on how to access the Diagnostics page.

12.3 Setting a static IP address

In some circumstances, you may need to set a static IP address for the camera's IP-network, rather than relying on the automatic IP addresses provided by the DHCP service (the camera's default setting).

Note:
Unless you are specifically instructed to do so in FLIR documentation, or have previous experience of configuring IP networks, you should NOT attempt to set the camera's IP-network parameters manually. If you mis-configure the IP-network parameters, your camera may stop working correctly or become inaccessible on the network.

This procedure assumes that you have already established a network connection, and can access the camera's Web interface. For further information, refer to: **p.52 — Camera IP address discovery**
To configure the camera's IP network parameters manually:

1. In the Internet Explorer Browser, type the camera IP address into the address bar.

   The camera's web interface is displayed
2. In the *[User Name]* box, type "expert"; in the *[Password]* box, type "expert", then click *[Log in]*.

   The *[Live Video]* page is displayed.
3. In the top menu, click *[Configuration]*, then in the left-hand menu, click *[Server > LAN Settings]*.

   The camera's network options are displayed.



4. Make any required changes to the IP-network parameters ("*[LAN Settings]*"). The following example shows how to set a static IP address:
   i. In the *[Interface: eth0]* section of the page, from the *[IP Address Mode]* list, select *[Static]*.
   ii. Adjust the values for *[IP Address]* and *[Netmask]* as required for the network your camera will be connected to. The remaining parameters are not likely to require changes.

Note:
Keep a record of the address shown in the *[IP Address]* box below the *[IP Address Mode]* list. You will need this address to access the camera's configuration web interface in future.

5. At the bottom of the *[LAN Settings]* page, click *[Save]*.

   An information dialog confirms that settings have been changed, and that a network restart is required.
6. click *[Restart Network]*.

   An information dialog confirms that the network has restarted, and that you may need to enter a new IP address to regain access to the camera's Web interface.

12.4 Accessing the camera's web interface page

Once you know the camera's IP address, you can enter it into a web browser to access the camera's web interface page.

Enter the IP address directly into the web browser's address bar, and then press *Enter* on a physical keyboard, or tap *Go* (or equivalent) on an on-screen keyboard.

Depending on the camera model, you may be prompted to enter a username and password to access the interface page. For more information on how to do this, refer to:

- **p.57 —** Logging in to the Web browser user interface

CHAPTER 13: CAMERA CONFIGURATION AND OPERATION

CHAPTER CONTENTS

- 13.1 Camera control (page 55)
- 13.2 Thermal camera image (page 56)
- 13.3 Image adjustments (page 57)
- 13.4 Web browser interface (page 57)

13.1 Camera control

Camera control options

There are a number of different ways of controlling the camera remotely.

- **Via a compatible multifunction display (MFD) / chartplotter** — With the camera connected to the MFD / chartplotter or the MFD / chartplotter network via Ethernet, you can either use a Web browser or an H.264-compatible video / camera application (if supported by your display) to view and control the camera remotely.
- **Via a Joystick Control Unit (JCU)** — With the JCU connected to the camera via a network switch, you can use the JCU's physical controls to control the camera remotely.
- **Via a Web browser** — With the camera connected to a laptop or another Ethernet device with a Web browser, you can use the Web browser to view and control the camera remotely.

Pan, tilt and zoom (PTZ)

The camera controls allow for pan (azimuth) and tilt (elevation) of the camera, as well as zoom (magnification) of the thermal image.

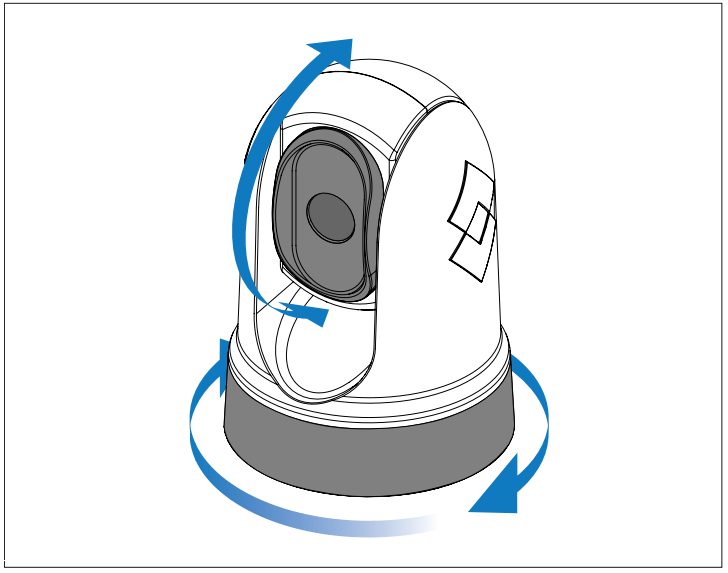

- Pan continuously through 360° (M200-Series only).
- Tilt to +110° / -90°, relative to the camera base.
- Zoom the thermal camera image.

You can control pan, tilt, and zoom (PTZ) using:

- A compatible multifunction display or chartplotter: see **p.41 — Compatible MFDs / chartplotters**
- The "UniController" on a JCU-3 remote keypad, or the joystick on a JCU-2 or JCU-4 remote keypad.
- The camera's Web browser interface: see **p.59 — Live Video page**

Home position

The home position is a preset position for the camera.

The home position usually defines a useful reference point — for example, straight ahead and level with the horizon.

Icon	Description
	• The home icon is displayed momentarily when you command the camera to move to its home position. • The home icon flashes 3 times when you set the camera's home position.

You can set the home position as required, and return the camera to the home position, using:

- A compatible MFD / chartplotter: see **p.41 — Compatible MFDs / chartplotters**
- A JCU remote keypad: refer to the JCU's documentation for further information.
- The camera's web browser interface: see **p.59 — Live Video page**

Surveillance mode

In surveillance mode, the camera continuously pans left and right, automatically scanning the scene.

Note:
Surveillance mode is available for M200-Series cameras only.

The camera continues scanning until you:

- Disable surveillance mode.

- Manually pan or tilt the camera.
- Command the camera to move to its home position.

Any of these actions stops surveillance mode; surveillance mode does not resume until you re-enable it.

You can control surveillance mode, including the scan speed and scan width, using:

- A compatible MFD / chartplotter: see **p.41 — Compatible MFDs / chartplotters**
- The user-programmable buttons on a JCU remote keypad
- The camera's Web browser interface: see **p.59 — Live Video page**

13.2 Thermal camera image

The thermal camera outputs an IP-video feed which can be displayed on a video monitor, a web browser, or a compatible multifunction display / chartplotter.



The IP-video feed comprises of:

- The thermal image
- Status icons

You should take time to familiarize yourself with the thermal image. This will help you to make the most of your system:

- Consider every object you view in terms of how it will look "thermally", as opposed to how it looks to your eye. For example, look for changes caused by the heating effect of the sun. These temperature changes are particularly evident immediately after sunset.
- Experiment with different palettes and scene presets.
- Experiment by looking for hot objects (such as people), compared to the colder surroundings.
- Experiment with the camera for daytime viewing. The camera can provide improved daytime viewing in environments where traditional video camera performance suffers, such as in shadows or backlit scenes.

Thermal camera status icons

The thermal camera image includes icons to show the current status of the camera.

Note:
Icons are colored red if the *[WhiteHot]* or *[BlackHot]* palette is in use, and colored white for all other palettes.

Icon	Description
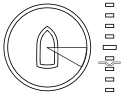	**Camera direction indicator** • *The segment inside the circle indicates which direction the camera is pointing with respect to the vessel (azimuth). • The scale and marker on the right indicates the camera's tilt angle (elevation). *M200-Series only.
	**Home position** • Displayed momentarily when you command the camera to move to its home position. • Flashes three times when you set the camera's home position.

Icon	Description
	**Park indicator** Displayed when the camera is parked.
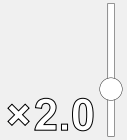	**Zoom indicator** Displayed whenever the thermal image is zoomed-in (magnified). The figure indicates the amount of magnification (up to x4.0).
	**Motor stalled** Displayed instead of the **Camera direction indicator** when the camera motor is stalled. **Note:** If this icon is displayed, check that the camera's movement is not being physically obstructed.

13.3 Image adjustments

Thermal camera scene presets

Scene presets enable you to quickly select the best image setting for the current environmental conditions.

During normal operation the thermal camera automatically adjusts itself to provide a high-contrast image optimized for most conditions. The Scene presets provide 4 additional settings that may provide better imagery in certain conditions. The 4 modes are:

- **Day** — scene preset mode for daytime conditions.
- **Night** — scene preset mode for night conditions.
- **Docking** — scene preset mode for docking.
- **High Contrast** — scene preset mode for extra-high contrast.

Although the preset names indicate their intended use, varying environmental conditions might make another setting more preferable. For example, the night running scene preset might also be useful while in a harbor. You may find it beneficial to experiment with the different scene presets to discover the best preset to use for different conditions.

Thermal camera color modes

A range of color modes are available to help you distinguish objects on-screen in different conditions.

Changing the color mode switches the thermal camera image between four available color palettes:

- WhiteHot
- RedHot
- Fusion
- FireIce

The factory default color mode is WhiteHot, which may improve your night vision.

Thermal camera reverse polarity

You can reverse the polarity of the video image to change the appearance of objects on-screen.

Changing the polarity setting will toggle between the two available polarities for the color mode that is already selected.

The available polarity options are:

- WhiteHot / BlackHot
- RedHot / RedHot Inverse
- Fusion / Fusion Inverse
- FireIce / FireIce Inverse

You may find it useful to experiment with this option to find the best setting to suit your needs.

13.4 Web browser interface

Logging in to the Web browser user interface

You can log in to the camera's Web interface using one of three User Names: *[user]*, *[expert]*, or *[admin]*.

- The *[user]* login can access the *[Live Video]* page and control the camera.
- The *[expert]* login can access the *[Setup]* menus and make configuration changes to the payloads and other components.
- The *[admin]* login can access the *[Maintenance]* menu and all the other menus as well as change the login passwords required.

If your product was:

- Originally obtained running a software version earlier than v2.09-45:

You can log in to the Web interface using the User Name *[user]* and Password *[user]*, the User Name *[expert]* and Password *[expert]*, or the User Name *[admin]* and Password *[fliradmin]*.

If your product was:

- Originally obtained running software version v2.09-45 or later:

You can log in to the Web interface using the User Name *[admin]* and the unique Password located on the serial number label supplied in the box and / or on the underside of your product:

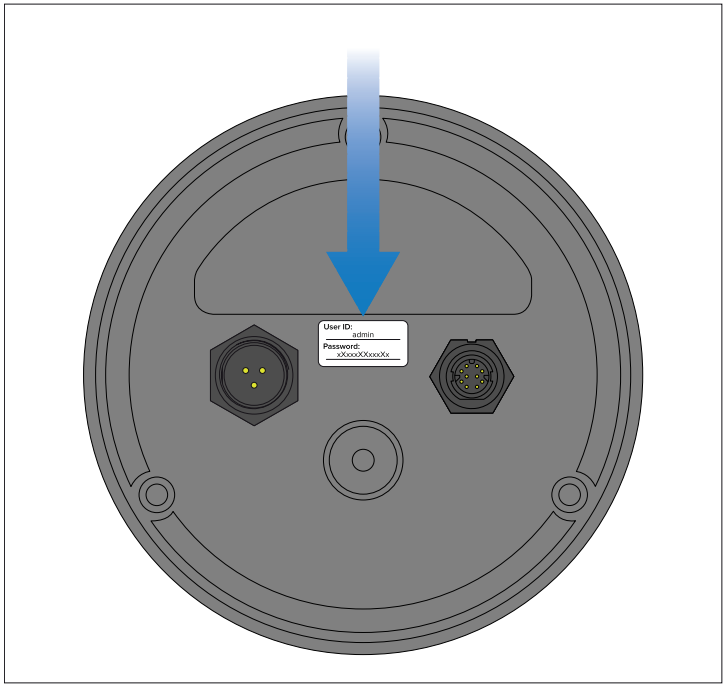

Once you have logged in using the *[admin]* User Name and the unique password, you can then set a password which will be used to log in to the *[user]* and *[expert]* User Name logins, by navigating to: *[Maintenance > Security Options]*.

Note:

- You should change the default login passwords to prevent unauthorized log in.
- Only two web sessions can be active at once.

To log in:

1. Go to the camera's web page by:
   - Entering the camera's IP address directly into the address bar of your web browser, OR
   - Double-clicking the camera in "My Network Places" (Windows XP) or "Network" (later versions of Windows).

   For more information, refer to the following section:
   p.52 — Camera IP address discovery

   The login screen with a picture of the camera is displayed.

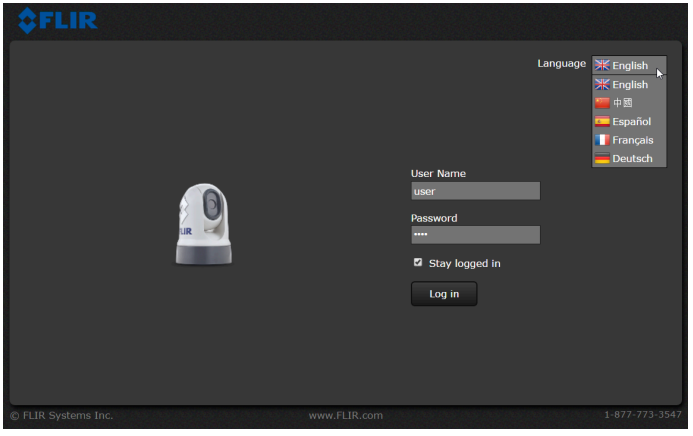

2. Select a different language if desired.
3. Enter the applicable login information referenced above, then click *[Log in]*.

   The *[Live Video]* page is displayed.

Live Video page

The Live Video page comprises a live image from the camera on the left side of the page, and a virtual joystick and function buttons on the right. Menu choices are available at the top of the screen, next to the FLIR logo.

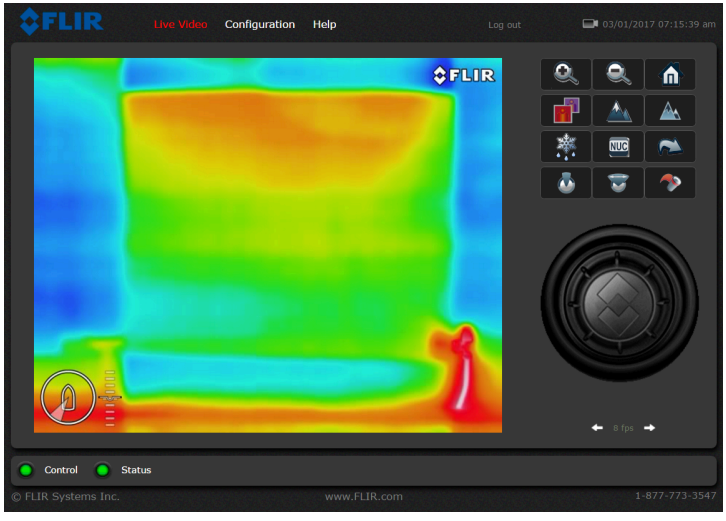

The **user** login, can only access the Live Video page and controls, and a limited selection of Configuration settings.

To change the password for the **user** login, click *[Configuration]* in the top menu, then in the *[Basic User (user)]* section of the Configuration page, select *[Allow change password]*.

Click *[Live Video]* to return to the Live Video page, and click *[user]* (next to the *[Log out]* link). The **Password change** dialog is displayed.



A frame-rate selector at the lower-right of the page enables you to change the rate at which video frames are displayed. This rate applies only to this instance of the web browser. Video streams for other users are not affected.

At the top of the page, the *[Help]* menu shows software version information. This page includes information about the camera, including hardware and software revision numbers, part numbers, and serial numbers. Before contacting FLIR Technical Support for assistance, make a note of the information from this page.

Use the *[Log out]* link at the top of the page to disconnect from the camera and stop the display of the video stream. If your web session is inactive for more than 20 minutes, you will be logged out automatically.

In the lower left of the screen are two indicator lights: *[Control]* and *[Status]*. Initially the Control light is off (black), indicating that you are not able to control the camera.

When multiple users are connected to a camera, only one user at a time can issue commands to the camera. If another user has control of the camera, the Control light is yellow. To request control of the camera, click on the yellow or black light, or by sending a command to the camera. The Status light may turn off (black) temporarily, while waiting for a response from the camera. There may be a slight delay responding to your inputs while the browser waits for a response from the camera.

In addition, when you move the mouse cursor over the video display, pan & tilt arrows, zoom buttons, and a snapshot button are shown.

The pan & tilt arrows and zoom buttons are shown at the lower-left of the screen; the snapshot button is shown at the upper-right.

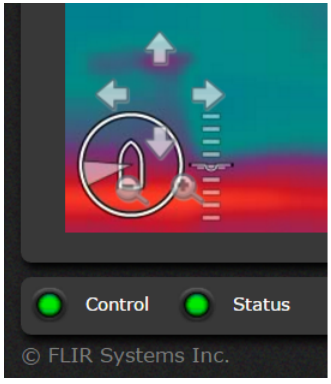

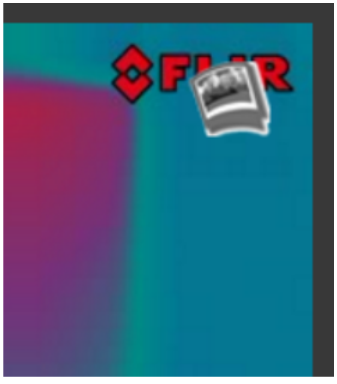

To save a still image from the video feed, click the *[Snapshot]* button. The video image is created as a JPEG (.jpg) file at the moment when the snapshot button is clicked. Follow the browser prompts to save the image file; the exact prompts depend on the browser you are using.

Note:
M100-Series cameras support tilt movements only.

Control icons

The control icons displayed on the right side of the page provide a way to control a range of common functions.

When you position your mouse cursor over an icon, a tool tip is displayed, indicating the icon's function.

The following table describes the function of each icon.

Icon	Function
	*[Zoom In]* Click and hold to zoom-in the thermal image. The current zoom level (between x1.0 and x4.0) is shown at the bottom-right of the thermal image.
	*[Zoom Out]* Click and hold to zoom-out the thermal image. The current zoom level (between x1.0 and x4.0) is shown at the bottom-right of the thermal image.
	*[Home]* Click and release to move the camera to its home position. Click and hold to set the current pan and tilt position as the home position.
	*[Toggle Palette]* Cycle through 4 different look up table (LUT) color palettes: *WhiteHot*, *RedHot*, *Fusion*, and *Firelce*. Depending on the subjects viewed and the environmental conditions, one color palette may be preferable to the others.
	*[Toggle Scene Preset]* Cycle through 4 different image presets: *Day*, *Night*, *Docking*, and *High Contrast*. Each preset adjusts the image brightness and contrast. Depending on the time of day, weather, and other conditions, you may find that one preset produces a clearer thermal image than the others.
	*[Toggle Polarity]* Switch the polarity of the image to change the appearance of objects on-screen. The available polarity options depend on the currently selected color palette: *WhiteHot* / *BlackHot*; *RedHot* / *RedHot Inverse*; *Fusion* / *Fusion Inverse*; *Firelce* / *Firelce Inverse*.
	*[Toggle De-ice]* Switch the camera's de-icing lens heater on or off. The icon displays a red **ON** overlay when the heater is operating.

Icon	Function
	*[IR NUC Calibration]* Perform a Non-Uniformity Correction (NUC) operation. This can improve the quality of the thermal video image.
	*[Scan Position Presets]* Display a numeric keypad. Click a number to select an *AutoScan* (Surveillance) preset position. Click the left-arrow or right-arrow to show the previous or next sequence of preset buttons. Click *[C]* to return to the main control icons.
	*[Toggle AutoScan (Surveillance) mode]* Switch the camera into and out of *AutoScan* (Surveillance) mode. While in this mode, the camera pans left and right continuously. **Note:** Surveillance mode is available for M200-Series cameras only.
	*[Toggle AutoScan (Surveillance) width]* Cycle through *AutoScan* (Surveillance) width settings. This controls the range through which the camera pans when in AutoScan (Surveillance) mode. **Note:** Surveillance mode is available for M200-Series cameras only.
	*[Toggle AutoScan (Surveillance) speed]* Cycle through *AutoScan* (Surveillance) speed settings. This controls the speed at which the camera pans when in *AutoScan* (Surveillance) mode. **Note:** Surveillance mode is available for M200-Series cameras only.

Ball-down (upside down) mode

You can configure the camera to account for a unit that is installed "ball down" (upside down), that is, with the base fixings positioned *above* the camera lens. For ball-down (upside down) installations, the thermal image presented on displays is rotated 180 degrees, and pan and tilt controls are modified to account for the inverted camera.

To configure ball-down (upside down) mode:

1. From the camera's Web interface, click *[Configuration]* on the top menu.

   The *[Configuration]* page is displayed.
2. From the left-hand panel, click *[Devices]*.

   The *[PT]* submenu is selected, and the *[PLAT]* panel is displayed.
3. From the *[Upside Down]* list, select *[Yes]*.
4. Click *[Save]* to confirm the change.

   An information dialog confirms that the changes have been saved correctly.
5. Click *[Accept]* in the information dialog.

   A message in the page footer indicates that you need to restart the camera server before the changes will be effective.
6. To stop the server, click the green icon on the left side of the page footer.

   An information dialog confirms that the server has stopped.
7. Click *[Accept]* in the information dialog.
8. To restart the server, click the black icon on the left side of the page footer.

   An information dialog confirms that the server is now running.
9. Click *[Accept]* in the information dialog.

   The black icon reverts to green, and the camera is now configured for ball-down (upside down) operation.

CHAPTER 14: MAINTENANCE

CHAPTER CONTENTS

- 14.1 Service and maintenance (page 63)
- 14.2 Routine camera inspections (page 63)
- 14.3 Cleaning the camera (page 63)

14.1 Service and maintenance

This product contains no user serviceable components. Please refer all maintenance and repair to authorized FLIR dealers. Unauthorized repair may affect your warranty.

14.2 Routine camera inspections

It's important to routinely inspect cameras and associated mounting hardware.

Important:
Routinely inspect the camera and its mounting surface. When the camera is powered off, grasp it firmly at the base and confirm it is rigid and secure. Then hold the camera above the base and confirm it is rigid, while rotating freely.

- Conduct both visual and mechanical checks during your inspection, including the use of torque wrenches to ensure that all mounting fixings are secured to the recommended torque, as stated in the installation instructions.
- Ensure that the camera and weight-bearing mountings (including any risers) are installed securely, that the coated surfaces are intact, and that there are no signs of damage.
- Maintain a regular inspection schedule. Both visual and mechanical checks should be included in each inspection. Maintain a record of all inspections.

14.3 Cleaning the camera

The camera housing and lens will require occasional cleaning. You should clean the lens when image quality degradation is noticed or excessive contaminant buildup is seen. Clean the interface between the yoke and base often to prevent accumulation of debris or salt deposits.

When cleaning this product:

- Do NOT wipe the lens window with a dry cloth, or with abrasive materials such as paper or scrub brushes, as this could scratch the coating.
- Do NOT use acid or ammonia based products.
- Do NOT pressure wash.

Particular care should be taken when cleaning the lens window, this has a protective anti-reflective coating which may be damaged by improper cleaning.

1. Switch off the power to the unit.
2. Clean the camera body with a clean, soft cotton cloth. You can moisten the cloth and use a mild detergent if required.
3. Clean the camera lens.
   - Rinse the lens with fresh water to remove all dirt particles and salt deposits, and allow to dry naturally.
   - If any spots or smears remain, very gently wipe the lens window with a clean microfibre cloth or soft cotton cloth.
   - If necessary, use isopropyl alcohol (IPA) or a mild detergent to remove any remaining spots or marks.

CHAPTER 15: SYSTEM CHECKS AND TROUBLESHOOTING

CHAPTER CONTENTS

- 15.1 Troubleshooting (page 65)
- 15.2 Camera not shown in your PC / laptop / tablet's device list (page 65)
- 15.3 Video not displayed (page 65)
- 15.4 Cannot control camera from MFD / chartplotter (page 65)
- 15.5 Erratic or unresponsive controls (page 66)
- 15.6 Camera image is inverted (page 66)
- 15.7 Camera image too dark or too light (page 66)
- 15.8 Product alerts (page 66)
- 15.9 FLIR Maritime technical support and servicing (page 67)

15.1 Troubleshooting

The troubleshooting section provides possible causes and the corrective action required for common problems that are associated with the installation and operation of your product.

Before packing and shipping, all products are subjected to comprehensive testing and quality assurance programs. If you do experience problems with your product, this section will help you to diagnose and correct problems to restore normal operation.

If after referring to this section you are still having problems with your product, please refer to the *Technical support and servicing* section of this manual for useful links and contact details.

15.2 Camera not shown in your PC / laptop / tablet's device list

In some circumstances, the camera may not appear in the device list.

Possible causes	Possible solutions
Incorrect IP address configuration:	Depending on your network configuration, it may take up to 5 minutes for the camera to appear in the list of devices. If the camera is not listed after 5 minutes, double-check that your IP address is configured correctly. Afterward, attempt to renew your IP device's IP address. For Windows 7, 8, 10, and 11: 1. Go to *[Start > Run]*, then type "cmd" (without quotes), and click *[OK]*. 2. In the Command Prompt window that opens, type "ipconfig /release" (without quotes), then press Enter. 3. Type "ipconfig /renew" (without quotes), then press Enter. 4. Type "exit" (without quotes), then press Enter to close the window.
VPN software enabled:	Ensure that any VPN (Virtual Private Network) software installed on your IP device is disabled.

15.3 Video not displayed

In the event that the camera is not displaying video:

Possible causes	Possible solutions
Camera is in Standby mode:	The camera will not display video if it is in Standby mode. Use the camera controls (either the thermal camera application or JCU) to "wake" the camera from standby.
Problem with the thermal camera network connections:	Check thermal camera network cables are sound and properly connected.
Problem with power supply to the camera or JCU (if used as the primary controller):	• Check the power connections to the camera and JCU / PoE injector (if used). • Ensure that the power switch / breaker is on. • Check the fuse / breaker state.

15.4 Cannot control camera from MFD / chartplotter

In the event that the camera cannot be controlled from a connected multifunction display (MFD) or chartplotter:

Possible causes	Possible solutions
Incorrect MFD / chartplotter application in use:	Ensure that you are attempting to use the correct MFD / chartplotter application in order to control the camera. For further information on which application(s) can be used to control the camera, refer to the documentation which accompanies your MFD / chartplotter.

15.5 Erratic or unresponsive controls

In the event that the camera's controls are responding erratically, or not responding at all:

Possible causes	Possible solutions
Network problem:	• Check that the controller and thermal camera are correctly connected to the network. (Note: This may be a direct connection or via a network switch.) • Check the status of the network switch. • Check that the network cables are free from damage.
Control conflict, e.g. caused by multiple users at different stations:	Ensure that no other controllers are in use at the same time.
Problem with the controller:	• Check power / network cabling to the controller and PoE injector (PoE only used with optional Joystick Control Unit). • Check other controllers (if available). If other controllers are operating, this will eliminate the possibility of a more fundamental camera fault.

15.6 Camera image is inverted

In some circumstances, the camera image may appear inverted.

Possible causes	Possible solutions
Camera "Ball down" (upside down) setting is incorrect:	Ensure that the relevant Ball down (upside down) setting is set correctly.

15.7 Camera image too dark or too light

Image adjustments may be required in order to optimize the displayed image.

Possible causes	Possible solutions
Display brightness is set too low:	Use the brightness controls at the display to adjust accordingly.
The *Scene Mode* is not appropriate for the current conditions:	A particular environment may benefit from a different *Scene Mode* setting. For example, a very cold background (such as the sky) could cause the camera to use a wider temperature range than appropriate. If a connected JCU is available, use the *[SCENE]* button to change the *Scene Mode*.

15.8 Product alerts

This section highlights the most recent product usability and troubleshooting information, reflecting feedback received from installers and end-users on their experiences since the product's launch.

Product alert	More information
There are currently no product alerts available for this product.	When a product alert is available for this product, a link will be provided in this column to the relevant section of the manual describing the issue in more detail.

15.9 FLIR Maritime technical support and servicing

FLIR provides a comprehensive product support service, as well as warranty, service, and repairs. You can access these services using the contact details provided below.

Product information

For the latest support information, go to: https://maritime-support.flir.com
If you need to request service or support, please have the following information to hand:

- Product name.
- Product identity.
- Serial number.
- Software application version.
- System diagrams.

You can obtain this product information using the menus available when using your product.

Warranty policy and registration

Visit the Raymarine website to **read the latest warranty policy**, and **register** your product's warranty online: www.bit.ly/rym-warranty

Servicing and contact information

FLIR and Raymarine offer dedicated service departments for servicing and repairs. Contact details:

Region	Contact details
United Kingdom (UK), EMEA, and Asia Pacific:	**Telephone:** +44 (0)1329 246 932 **Address:** Marine House, Cartwright Drive, Fareham, PO15 5RJ, UK. www.bit.ly/rym-service
United States (US):	**Telephone:** Tel: +1 (603) 324 7900 (Toll-free: +800 539 5539) **Address:** 110 Lowell Road, Hudson, NH 03051, USA. www.bit.ly/rym-service

CHAPTER 16: TECHNICAL SPECIFICATION

CHAPTER CONTENTS

- 16.1 Physical specification (page 69)
- 16.2 Power specification (page 69)
- 16.3 Network specification (page 69)
- 16.4 Environmental specification (page 69)
- 16.5 Video specification (page 69)
- 16.6 Conformance specification (page 69)

16.1 Physical specification

Specification	
Dimensions:	Camera: • Base diameter: 161.1 mm (6.34 in.) • Height: 229.3 mm (9.03 in.) Camera attached to top-down riser: • Base diameter (without seal): 188.0 mm (7.40 in.) • Base diameter (with seal): 190.0 mm (7.48 in.) • Height: 279.0 mm (10.98 in.)
Weight:	2.7 kg (6.0 lb) without top-down riser; 3.0 kg (6.6 lb) with top-down riser
Pan / tilt:	• 360° continuous pan (M200-Series only) • +110°/-90° tilt

16.2 Power specification

Specification	
Nominal supply voltage:	12 V to 24 V dc
Operating voltage range:	10.8 V to 31.2 V dc
Current:	Peak 5.0 A
Power consumption:	• 15 W typical • 18 W maximum

16.3 Network specification

Specification	
Network connection ports:	1x waterproof RayNet connection ports (10 / 100 Mbits/s)
IEEE Standard:	Conforms to IEEE 802.3

16.4 Environmental specification

Specification	
Operating temperature:	-25 °C to +55 °C (-13 °F to 131 °F)
Storage temperature:	-30 °C to +70 °C (-22 °F to 158 °F)
Automatic window defrost:	Standard at power-up (3 minute duration)
Relative humidity:	Max 95%
Water ingress protection rating:	IPx6
Wind:	100 mph (161 kph)
Vibration:	IEC 60945
Salt mist:	IEC 60945

16.5 Video specification

Specification	
Output:	H264-encoded IP video stream
Video resolution:	640(H) x 512(V) pixels
Sensor resolution:	320(H) x 240(V) pixels
Field of view:	24 degrees (horizontal); 18 degrees (vertical)

16.6 Conformance specification

Specification	
Electro-Magnetic Compliance (EMC):	EMI: IEC 60945

CHAPTER 17: SPARES AND ACCESSORIES

CHAPTER CONTENTS

- 17.1 M100 / M200 Series camera accessories (page 71)
- 17.2 FLIR networking accessories (page 72)
- 17.3 RayNet to RayNet cables and connectors (page 74)
- 17.4 RayNet to RJ45, and RJ45 (SeaTalk HS) adapter cables (page 75)

17.1 M100 / M200 Series camera accessories

Item	Part
Right-angled single keyway power cable, 10 m (32.8 ft)	A80511
Right-angled RayNet (Ethernet) cable, 10 m (32.8 ft)	A80512
RayNet (Ethernet) adapter cable, 100 mm (3.9 in)	A80513
Top-down riser for M100 / M200 Series cameras	A80509
JCU-3 remote control unit (with portrait and landscape keypad mats)	A80510

17.2 FLIR networking accessories

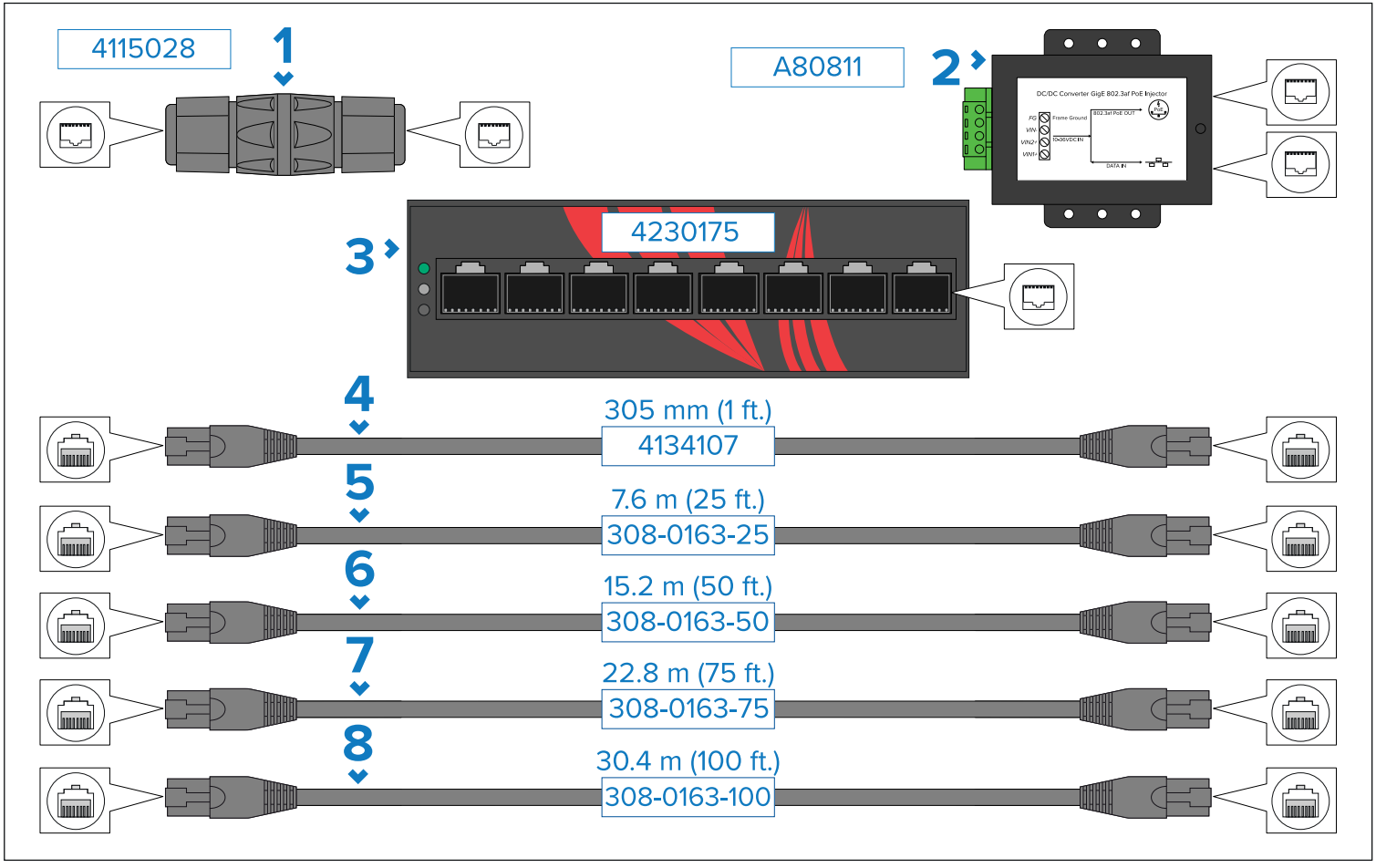

1. RJ45 coupler, for joining 2 separate RJ45 network cables together to achieve longer cable runs.
2. PoE Injector (2nd Generation; 5 Gbit). Supplies power to a non-PoE network connection. Typical use is for powering a JCU-Series controller connected to a non-PoE network switch.
3. PoE 8-port Gigabit Network Switch.
4. 305 mm (1 ft.) RJ45-to-RJ45 Ethernet cable, double shielded with LSZH low interference jacket.
5. 7.6 m (25 ft.) RJ45-to-RJ45 Ethernet cable, double shielded with LSZH low interference jacket.
6. 15.2 m (50 ft.) RJ45-to-RJ45 Ethernet cable, double shielded with LSZH low interference jacket.

7. 22.8 m (75 ft.) RJ45-to-RJ45 Ethernet cable, double shielded with LSZH low interference jacket.
8. 30.4 m (100 ft.) RJ45-to-RJ45 Ethernet cable, double shielded with LSZH low interference jacket.

17.3 RayNet to RayNet cables and connectors

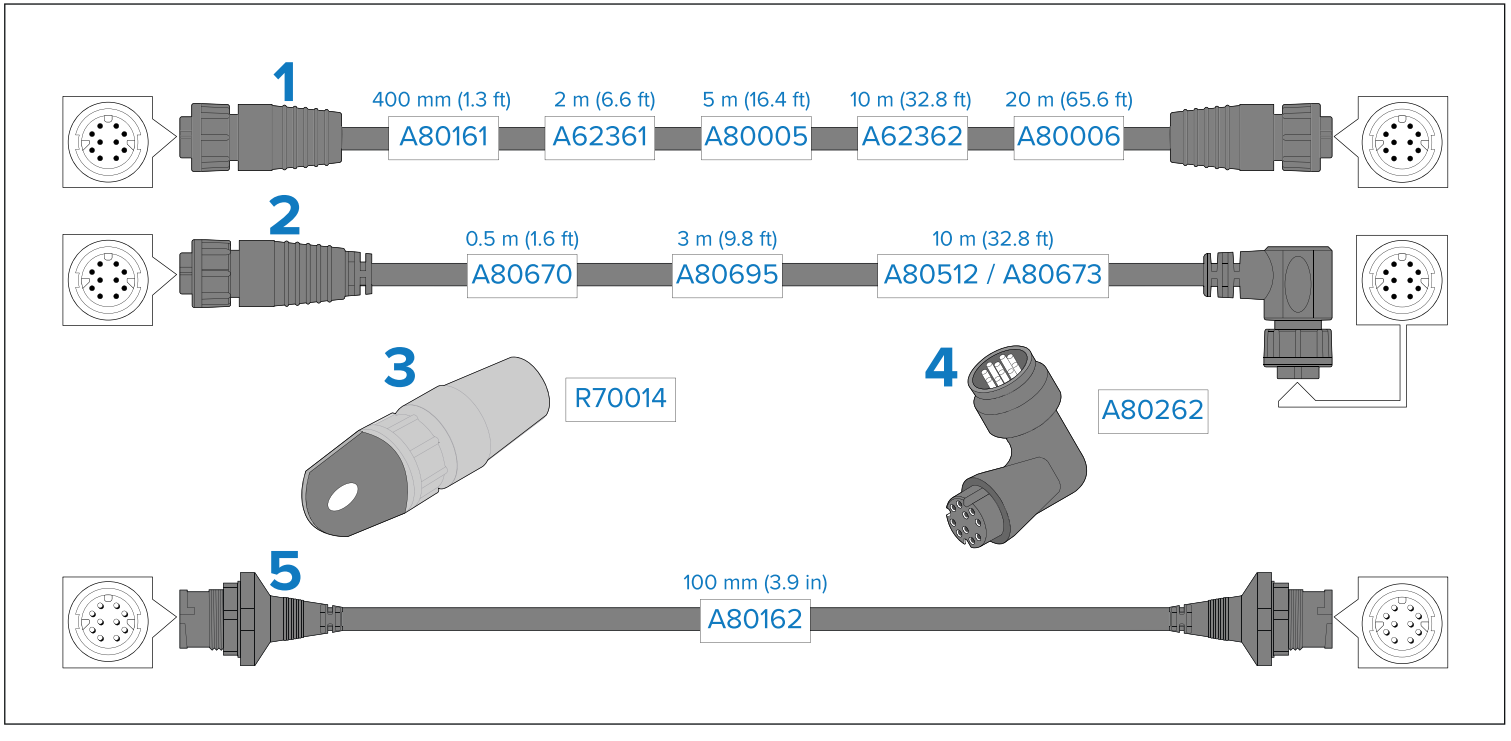

1. Standard RayNet connection cable with a RayNet (female) socket on both ends.
2. Right-angle RayNet connection cable with a straight RayNet (female) socket on one end, and a right-angle RayNet (female) socket on the other end. Suitable for connecting at 90° (right angle) to a device, for installations where space is limited.
3. RayNet cable puller (5 pack).
4. RayNet to RayNet right-angle coupler / adapter. Suitable for connecting RayNet cables at 90° (right angle) to devices, for installations where space is limited.
5. Adapter cable with a RayNet (male) plug on both ends. Suitable for joining (female) RayNet cables together for longer cable runs.

17.4 RayNet to RJ45, and RJ45 (SeaTalk HS) adapter cables

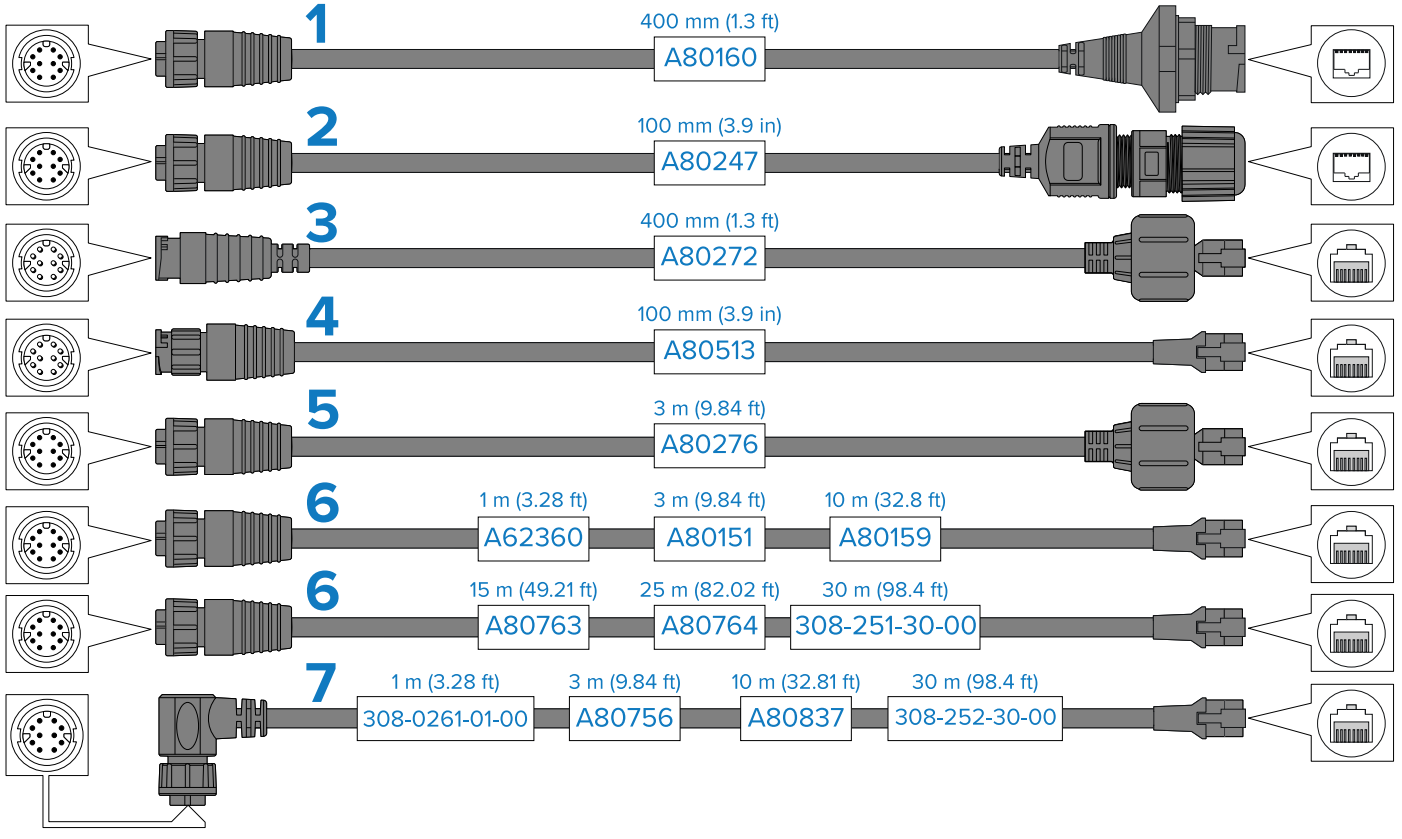

1. Adapter cable with a RayNet (female) socket on one end, and a waterproof (female) RJ45 (SeaTalk HS) socket on the other end, accepting the following cables with an RJ45 (SeaTalk HS) waterproof locking (male) plug:
   - A62245 (1.5 m).
   - A62246 (15 m).
2. Adapter cable with a RayNet (female) socket on one end, and a waterproof (female) RJ45 (SeaTalk HS) socket on the other end, along with a locking gland for a watertight fit.
3. Adapter cable with a RayNet (male) plug on one end, and an RJ45 (SeaTalk HS) waterproof (male) plug on the other end.

4. Adapter cable with a RayNet (male) plug on one end, and an RJ45 (male) plug on the other end.
5. Adapter cable with a RayNet (female) socket on one end, and an RJ45 (SeaTalk HS) waterproof (male) plug on the other end.
6. Adapter cable with a RayNet (female) socket on one end, and an RJ45 (male) plug on the other end.
7. Adapter cable with a right-angled RayNet (female) socket on one end, and an RJ45 (male) plug on the other end.

Appendix A Software release history

The list below is a cumulative list of the new features introduced in subsequent releases of the M100 & M200 Series software, since the initial release (v1.10-276).

To download the software, and view the complete list of all software updates, including new features, bug fixes, and performance improvements, visit:

M100 & M200 Series software download link
www.bit.ly/m200-download

M100 & M200 Series, v2.10-49 changes:
(Software release date: *October 2026*)

- Software security improvements.

M100 & M200 Series, v2.09-45 new features:
(Software release date: *May 2024*)

- Updated Web UI admin passwords to comply with the PSTI (Product Security and Telecommunications Infrastructure) regulation. For more information, refer to:
p.57 — Logging in to the Web browser user interface

M100 & M200 Series, v2.08-39 new features:
(Software release date: *March 2021*)

- Maintenance release.

M100 & M200 Series, v2.07-24 new features:
(Software release date: *July 2018*)

- Maintenance release.

M100 & M200 Series, v2.05-16 new features:
(Software release date: *October 2017*)

- Maintenance release.

M100 & M200 Series, v2.04-8 new features:
(Software release date: *July 2017*)

- Maintenance release.

M100 & M200 Series, v1.13-280 new features:
(Software release date: *May 2017*)

- Maintenance release.

M100 & M200 Series, v1.11-227 new features:
(Software release date: *May 2017*)

- Maintenance release.

M100 & M200 Series, v1.10-276 new features:
(Software release date: *April 2017*)

- Initial public release.

Index

A

Accessories 71
  Network adapter cables 75
  Network cables 74
  Networking 72
  RayNet cables 74

B

Box contents 19

C

Cable
  Bend radius 39
  Protection 39
  Routing 39
  Security 39
  Strain relief 39
Cabling
  Circuit isolation 39
Camera control options 55
Camera orientation 28
  Ball-down 28
  Ball-up 28
Circuit isolation 39
Color modes 57
Compass safe distance 25
Compatible hardware
  JCU 17
  MFD / chartplotter 42
Connecting cables 38
Connections 37
  Battery 49
  Distribution panel 48
  Grounding 50
  Network 37
  Power 37, 47
  video 37
Contact details 67
Control options 16

D

Declaration of conformity 12
DHCP 52
Display options 17

E

Electromagnetic Compatibility 11, 25
EMC, *See* Electromagnetic Compatibility

F

Fuse ratings 20, 47
Fuse requirement 19

H

Home position 55

I

Inline fuse 19
Installation
  Best practice 49
  Camera orientation 28
  Location requirements 24
  Tools required 28
Interference 25
    See also Compass safe distance
IP address
  static 53

J

JCU
  JCU-1 17
  JCU-2 17
  JCU-3 17
  JCU-4 17

L

Location requirements 24

M

Maintenance 10, 63
  Routine camera inspections 10, 63

N

Network
  cables 75
  Cables 72
  PoE 72
  Switch 72
Networking
  DHCP 52
  IP address allocation 52
  Link Local address 52
  Static IP address 52
New features 77

O

Operation
  Camera control options 55
  Camera controls
    Home position 55
  Color modes 57
  Reverse video 57
  Scene presets 57

P

Pan 55
Parts supplied 19
Power
  Battery connection 49
  Cable extension 49
  Connection to battery 49
  Connection to distribution panel 48
  Distribution 47
  Distribution panel 48
  Fuse ratings 20, 47
  Fuses 19
  Grounding 49
  Sharing a breaker 48
Power cable extension 49
Product recycling (WEEE) 12
Product support 67
PTZ 55

R

RayNet
  cables 74–75
Reverse video 57
RJ45
  cables 75

S

Scene presets 57
SeaTalkhs
  cables 75
Service Center 67
Servicing 10, 63
Software release history 77
Software version 14
Spares 71
Status icons 56

T

Technical specification
  Conformance specification 69
  Environmental specification 69
  Network specification 69
  Physical specification 69
  Power specification 69
  Video specification 69
Technical support 67
Thermal breaker ratings 20, 47
Tilt 55
Troubleshooting 65
  Camera image contrast issues 66
  Camera image inverted 66

Camera not in device list..... 65
Cannot control camera 65
Unresponsive controls 66
Video not displayed 65

W

Warranty 67
Web browser
network connection setup 52
WEEE Directive..... 12
What's in the box 19

Z

Zoom..... 55