

TELEDYNE | Raymarine®

AXIOM

Installation Instructions

Document number: 87298 (Rev 5) | English (en-US) | Date: 09-2026

Legal notices

Trademark and patents notice

Raymarine®, **Tacktick®**, **Pathfinder®**, **Clear Pulse®**, **Truzoom®**, **SeaTalk®**, **SeaTalk HS™**, **SeaTalk NG™**, and **MicroNet™**, are registered or claimed trademarks of Teledyne Raymarine UK Limited.
FLIR®, **Fishidy®**, **Fishing Hot Spots®**, **YachtSense™**, **DockSense®**, **RangeFusion™**, **DownVision®**, **SideVision®**, **RealVision®**, **HyperVision™**, **Wi-Fish®**, **Dragonfly®**, **Element®**, **Quantum®**, **Cyclone™**, **Alpha™**, **Axiom®**, **Infrared Everywhere**, **The World's Sixth Sense** and **ClearCruise®** are registered or claimed trademarks of Teledyne FLIR LLC.
All other trademarks, trade names, or company names referenced herein are used for identification only and are the property of their respective owners.
This product is protected by patents, design patents, patents pending, or design patents pending.

Fair Use Statement

You may print no more than three copies of this manual for your own use. You may not make any further copies or distribute or use the manual in any other way including without limitation exploiting the manual commercially or giving or selling copies to third parties.

Content notice

Please ensure that you have obtained this document only from Raymarine, and that it is the **latest** available version.
There are numerous third-party Internet websites (such as *www.manualslib.com*) hosting Raymarine product manuals. These websites are not authorized by Raymarine to do so, and are often hosting illegitimate or older versions of Raymarine product manuals, which may contain inaccurate or misleading information.
To obtain the latest official documentation for a Raymarine product, please visit the official Raymarine website: www.docs.raymarine.com

Artificial Intelligence (AI) content notice

There are numerous third-party **Artificial Intelligence** (AI) services available to the public, which are capable of providing a summary or transcription of the information provided by official Raymarine publications or websites, either in written or audio/video formats. These services may alter, supplement, or convey the original information provided by Raymarine in inaccurate or misleading ways.
Please ensure that you have obtained this document only from Raymarine, and that it is the **latest** available version.

Language translations notice

The content in this document may be available in languages other than the original source language (English), either via translated documents provided by Raymarine, or translations provided by online translation services. These translations may employ the use of **Artificial Intelligence** (AI) or **Machine Translation** (MT) in the language translations process, which may not provide a wholly accurate or consistent translation of the original English document. Only the original official English documents provided by Raymarine should be considered the authoritative versions of end-user product documentation for Raymarine products.

English (en-US)
Document number: 87298 (Rev 5)
AE;85980;2026-09-18T14:58:39

CONTENTS

CHAPTER 1 IMPORTANT INFORMATION..... 10
Safety warnings.....10
Product warnings.....10
Regulatory notices.....11
Regulatory e-Label.....11
Disclaimer.....11
Electronic chart data.....12
Declaration of Conformity.....12
Network interfaces and services.....12
PSTI Compliance.....13
RF exposure.....13
Compliance Statement (Part 15.19).....13
FCC Interference Statement (Part 15.105 (b)).....13
Innovation, Science and Economic Development Canada (ISED).....13
Innovation, Sciences et Développement économique Canada (Français).....13
Japanese approvals.....13
MSIP Warning Statement for Radio Devices (Korea only).....14
Product disposal.....14
IMO and SOLAS.....14
Warranty policy and registration.....14
Technical accuracy.....14
Publication copyright.....15
CHAPTER 2 DOCUMENT INFORMATION..... 16
2.1 Document information.....17
2.2 Applicable products.....17
2.3 Product documentation.....18
Operation instructions.....18
CHAPTER 3 PRODUCT AND SYSTEM OVERVIEW..... 19
3.1 Product overview.....20
3.2 Minimum required LightHouse software version.....20
3.3 Typical systems.....21
CHAPTER 4 COMPATIBLE TRANSDUCERS..... 23
4.1 Axiom RV 3D variant — compatible transducers.....24
Required cables — RealVision 3D transducers.....24
RealVision 3D transducers.....24
Required cables — DownVision transducers.....25
DownVision transducers.....25
Required cables — CPT-S-Series conical beam transducers.....25
CPT-S-Series conical beam transducers.....25
Required cables — Traditional transducers.....26
Traditional transducers.....26
4.2 Axiom DV variant — compatible transducers.....27

Required cables — DownVision transducers 27
DownVision transducers 27
Required cables — CPT-S-Series conical beam transducers 27
CPT-S-Series conical beam transducers 27
Required cables — Traditional transducers 28
Traditional transducers 28

CHAPTER 5 PARTS SUPPLIED 30
5.1 Parts supplied — Axiom 7" 31
5.2 Parts Supplied — Axiom 7" (DISP) 31
5.3 Parts supplied — Axiom 9" and Axiom 12" 32
5.4 Parts supplied — Axiom 9" and Axiom 12" (DISP) 32
5.5 Inline fuse requirement 33

CHAPTER 6 PRODUCT DIMENSIONS 34
6.1 Axiom 7" trunnion mount dimensions 35
6.2 Axiom 7" surface and flush mount dimensions 35
6.3 Axiom 9" and 12" trunnion mount dimensions 36
6.4 Axiom 9" and 12" surface and flush mount dimensions 37

CHAPTER 7 LOCATION REQUIREMENTS 38
7.1 Warnings and cautions 39
7.2 General location requirements 39
7.3 EMC installation guidelines 39
7.4 RF interference 40
7.5 Compass safe distance 40
7.6 GNSS (GPS) location requirements 40
7.7 Touchscreen location requirements 41
7.8 Wireless location requirements for optimum performance 42
7.9 Viewing angle considerations 43

CHAPTER 8 MOUNTING OPTIONS 44
8.1 Mounting options 45

CHAPTER 9 TRUNNION MOUNTING 46
9.1 Parts required (trunnion mount installations) 47
9.2 Tools required (trunnion mount installations) 47
9.3 Trunnion bracket mounting 48

CHAPTER 10 SURFACE MOUNTING 49
10.1 Tools required (surface mount installations) 50
10.2 Rear access requirements 50
10.3 Preparing the mounting surface — surface mounting 50
10.4 Surface mount installation methods 51
Removing the trunnion adaptor (Axiom 7" only) 51
Surface mounting using the trunnion adaptor (Axiom 7" only) 52
Surface mounting using the rear mounting kit 53

CHAPTER 11 FLUSH MOUNTING 55
11.1 Tools required (flush mount installations) 56
11.2 Rear access requirements 56

11.3 Preparing the mounting surface — flush mounting 56
11.4 Flush mount installation methods 57
Removing the trunnion adaptor (Axiom 7" only) 58
Flush mounting using the trunnion adaptor (Axiom 7" only) 58
Flush mounting using the rear mounting kit 59
CHAPTER 12 CABLES AND CONNECTIONS — GENERAL INFORMATION 61
12.1 General cabling guidance 62
Cable types and length 62
Cable routing and bend radius 62
Strain relief 62
Circuit isolation 62
Cable shielding 63
Connecting cables 63
Bare-ended wires 63
12.2 Connections overview 64
CHAPTER 13 POWER CONNECTIONS 65
13.1 Power connection 66
Inline fuse and thermal breaker ratings 66
Power distribution 66
Power cable extension (12 / 24 V systems) 68
Grounding — optional dedicated drain wire 69
CHAPTER 14 TRANSDUCER CONNECTIONS — AXIOM RV 3D 71
14.1 RealVision transducer connection 72
RealVision transducer extension cables 72
14.2 DownVision and CPT-S-Series transducer connection 73
DownVision transducer extension cable 73
14.3 Traditional transducer connection 73
14.4 Axiom RV 3D variant — Transducer adaptor cables 73
CHAPTER 15 TRANSDUCER CONNECTIONS — AXIOM DV 75
15.1 DownVision and CPT-S-Series transducer connections 76
DownVision transducer extension cable 76
15.2 Traditional transducer connection 76
15.3 Axiom DV variant — Transducer adaptor cables 76
CHAPTER 16 NETWORK CONNECTIONS 78
16.1 Networking constraints 79
16.2 NMEA 2000 / SeaTalk NG connection 80
16.3 NMEA 0183 connection 80
16.4 Network connection 81
16.5 Internet connection 82
YachtSense Link network connection 82
Connecting to the internet using Wi-Fi 82
Wi-Fi settings (Axiom-Series displays) 83
CHAPTER 17 USB CONNECTIONS 84
17.1 Accessory connection 85
Fitting suppression ferrites 85

CHAPTER 18 MAINTAINING YOUR DISPLAY 87
18.1 Service and maintenance 88
Routine equipment checks 88
18.2 Product cleaning 88
Cleaning the display case 88
Cleaning the display screen 88
Cleaning the sun cover 88
CHAPTER 19 OPERATION 90
19.1 Operation instructions 91
CHAPTER 20 TROUBLESHOOTING 92
20.1 Troubleshooting 93
20.2 LED Diagnostics 93
20.3 Miscellaneous troubleshooting 94
20.4 Power up troubleshooting 94
Performing a power on reset on touch-only displays 95
20.5 GNSS (GPS) troubleshooting 95
20.6 Sonar troubleshooting 96
20.7 Wi-Fi troubleshooting 99
20.8 Touchscreen troubleshooting 101
CHAPTER 21 TECHNICAL SUPPORT 102
21.1 Raymarine technical support and servicing 103
Viewing product information 104
Remote Support via AnyDesk 104
21.2 Learning resources 105
CHAPTER 22 TECHNICAL SPECIFICATION — AXIOM 7" 106
22.1 Physical specification 107
22.2 Power specification 107
22.3 Environmental specification 107
22.4 LCD specification 107
22.5 Network specification 108
22.6 Storage specification 108
22.7 DownVision sonar specification 108
22.8 RealVision 3D sonar specification 108
22.9 Internal GNSS (GPS / GLONASS) receiver specification 109
CHAPTER 23 TECHNICAL SPECIFICATION — AXIOM 9" 110
23.1 Physical specification 111
23.2 Power specification 111
23.3 Environmental specification 111
23.4 LCD specifications 111
23.5 Network specification 111
23.6 Storage specification 112
23.7 RealVision 3D sonar specification 112
23.8 Internal GNSS (GPS / GLONASS) receiver specification 112
CHAPTER 24 TECHNICAL SPECIFICATION — AXIOM 12" 114
24.1 Physical specification 115
24.2 Power specification 115
24.3 Environmental specification 115
24.4 LCD specification 115
24.5 Network specification 115
24.6 Storage specification 116
24.7 RealVision 3D sonar specification 116
24.8 Internal GNSS (GPS / GLONASS) receiver specification 116

CHAPTER 25 SPARES AND ACCESSORIES 118
25.1 Spares 119
25.2 Accessories 119
Legacy chartplotter adaptor plates 120
Axiom RV 3D variant — Transducer adaptor cables 120
Axiom DV variant — Transducer adaptor cables 120
25.3 RayNet to RayNet cables and connectors 121
25.4 RayNet to RJ45, and RJ45 (SeaTalk HS) adapter cables 122
25.5 SeaTalk NG cables and accessories 124

APPENDIX A NMEA 2000 PGNS 129

APPENDIX B LEGACY ES AND GS SERIES COMPATIBILITY WITH LEGACY ES AND GS SERIES COMPATIBILITY WITH AXIOM-SERIES DISPLAYS 129

APPENDIX C ETHERNET (IPV4) NETWORKING OF RAYMARINE DEVICES WITH THIRD-PARTY PRODUCTS 130

CHAPTER 1: IMPORTANT INFORMATION

Safety warnings



Warning: Product installation and operation

• This product must be installed and operated in accordance with the instructions provided. Failure to do so could result in personal injury or damage to your vessel. It may also cause poor product performance or invalidate the product warranty.

• Raymarine highly recommends certified installation by a Raymarine approved installer. A certified installation qualifies for enhanced product warranty benefits. Register your warranty on the Raymarine website: www.bit.ly/rym-warranty



Warning: High voltage

This product contains high voltage. Adjustments require specialized service procedures and tools only available to qualified service technicians. There are no user serviceable parts or adjustments. The operator should never remove the cover or attempt to service the product.



Warning: Switch off power supply

Ensure that the vessel's power supply is switched OFF before starting to install this product. Do NOT connect or disconnect equipment with the power switched on, unless instructed to do so in this document.



Warning: Potential ignition source

This product is NOT approved for use in hazardous/flammable atmospheres. Do NOT install in a hazardous/flammable atmosphere (such as in an engine room or near fuel tanks).

Product warnings



Warning: Positive ground systems

Do NOT connect this unit to a system which has positive grounding.



Warning: Power supply voltage

Connecting this product to a voltage supply greater than the specified maximum rating may cause permanent damage to the unit. For the correct voltage, refer to the information label affixed to the product.



Warning: Marine-grade sealant

Only use marine-grade neutral cure polyurethane sealants. Do NOT use sealants containing acetate or silicone, which can cause damage to plastic parts.



Warning: Product grounding

Before applying power to this product, it MUST be correctly grounded, in accordance with the instructions provided.

Warning: Anti-virus protection

This product does not include protection against computer viruses. Before inserting any memory device, ensure it is free from computer viruses by scanning the device with a suitable anti-virus application with up to date virus definitions.

Caution: Power supply protection

When installing this product, ensure that the power source is adequately protected by means of a suitably-rated fuse or thermal circuit breaker.

Caution: Sun covers

• Sun covers are used to protect the display screen against the damaging effects of ultraviolet (UV) light. If your product is supplied with a sun cover always ensure it is fitted when the product is not in use.

• To avoid potential loss of the sun cover, ensure that the sun cover is removed when travelling at high speed, whether in the water or when the vessel is being towed.

• To avoid potential screen damage, ensure that the rear surface of the sun cover and the display screen are clean and free from debris before placing the sun cover on the screen.

Caution: Service and maintenance

This product contains no user serviceable components. Please refer all maintenance and repair to authorized Raymarine dealers. Unauthorized repair may affect your warranty.

Regulatory notices

Regulatory e-Label

All the applicable regulatory and compliance standards for your product are listed in electronic format in a regulatory “e-label” document, which can be viewed on your product’s display.

To access the Regulatory e-Label for your product:

From the Homescreen: *[Settings > Getting Started > Regulatory Approvals]*

Disclaimer

Raymarine does not warrant that this product is error-free or that it is compatible with products manufactured by any person or entity other than Raymarine.

Raymarine is not responsible for damages or injuries caused by your use or inability to use the product, by the interaction of the product with products manufactured by others, or by errors in information utilized by the product supplied by third parties.

Third-party hardware, such as converters, adapters, routers, switches, Access Points etc., provided by third parties, may be made available directly to you by other companies or individuals under separate terms and conditions, including separate fees and charges. Teledyne Raymarine UK Limited or its affiliates have not tested or screened the third-party hardware.

Raymarine has no control over, and is not responsible for:

- (a) the content and operation of such third-party hardware; or:
- (b) the privacy or other practices of such third-party hardware.

The fact that Raymarine’s documentation may make reference to such third-party hardware does not indicate any approval or endorsement of any such third-party hardware. Raymarine may reference such third-party hardware only as a convenience.

THIS INFORMATION IS MADE AVAILABLE BY Raymarine ON THE BASIS THAT YOU EXCLUDE TO THE FULLEST EXTENT LAWFULLY PERMITTED ALL LIABILITY WHATSOEVER FOR ANY LOSS OR DAMAGE HOWSOEVER ARISING OUT OF THE USE OF THIS INFORMATION OR RELIANCE UPON THIS INFORMATION.

Raymarine does not exclude **Raymarine**’s liability (if any) to you for personal injury or death resulting from **Teledyne Raymarine UK Limited** negligence, for fraud or for any matter which it would be illegal to exclude or to attempt to exclude.

Electronic chart data

Raymarine does not warrant the accuracy of such information, and is not responsible for damages or injuries caused by errors in chart data or information utilized by the product and supplied by third parties. Use of electronic charts provided by third parties is subject to the supplier's End-User License Agreement (EULA).

Declaration of Conformity

Declaration of Conformity for product sold into the UK, Australia and New Zealand, and EU member state regions.

Teledyne Raymarine UK Limited declares that the radio equipment type products listed below are in conformity with the relevant sections of the listed designated standards and / or other normative documents:

- **Axiom 7"**, part numbers: E70363, E70363-DISP
- **Axiom 7" DV**, part numbers: E70364, E70364-01, E70364-02, E70364-DISP
- **Axiom 7" RV 3D**, part numbers: E70365, E70365-03, E70365-DISP
- **Axiom 9"**, part numbers: E70366, E70366-DISP
- **Axiom 9" RV 3D**, part numbers: E70367, E70367-02, E70367-03, E70367-DISP
- **Axiom 12"**, part numbers: E70368, E70368-DISP
- **Axiom 12" RV 3D**, part numbers: E70369, E70369-03, E70369-DISP

Region	Standard	Mark
UK	EMC Regulations 2016	UKCA
EU	Radio Equipment Directive 2014/53/EU	CE
Australia and New Zealand	AS/NZS 4417.1 & 2	

The original Declaration of Conformity certificate may be viewed on the relevant product page at www.bit.ly/axiom-docs

Network interfaces and services

Declaration of Network Interfaces and Services used by this product.

Devices connected to the product using a RayNet (Ethernet) cable or via Wi-Fi use the following network interfaces and services. These interfaces and services are required for proper product operation, and cannot be disabled.

Interfaces

- RayNet (Ethernet)
- Wi-Fi

Services

Services	RayNet (Ethernet)	Wi-Fi
Raymarine proprietary services	Yes	Yes
DHCP	Yes	Yes
HTTP	Yes	Yes
LLDP	Yes	Yes
NFS	Yes	Yes
RPC Bind	Yes	Yes
SSH	Yes	Yes
Telnet	Yes	Yes
Websocket	Yes	Yes
Protocol Buffers	Yes	Yes

Note:
When you connect a new chartplotter to the network, private information is synchronized with the newly-added device.

PSTI Compliance

For products sold into the United Kingdom (UK), use the following link to obtain the product's Statement of Compliance with the *Product Security and Telecommunications Infrastructure* (PSTI) Regulations:

Visit the following web address and enter the product's model name or number (SKU) into the provided search field:

- www.bit.ly/rym-sec-com

RF exposure

This equipment complies with FCC / ISED RF exposure limits for general population / uncontrolled exposure. The wireless LAN / Bluetooth antenna is mounted behind the front facia of the display. This equipment should be installed and operated with a minimum distance of 1 cm (0.39 in) between the device and the body. This transmitter must not be co-located or operating in conjunction with any other antenna or transmitter, except in accordance with FCC multi-transmitter product procedures.

Compliance Statement (Part 15.19)

This device complies with Part 15 of the FCC Rules. Operation is subject to the following two conditions:

1. This device may not cause harmful interference.
2. This device must accept any interference received, including interference that may cause undesired operation.

FCC Interference Statement (Part 15.105 (b))

This equipment has been tested and found to comply with the limits for a Class B digital device, pursuant to Part 15 of the FCC Rules.

These limits are designed to provide reasonable protection against harmful interference in a residential installation. This equipment generates, uses, and can radiate radio frequency energy and, if not installed and used in accordance with the instructions, may cause harmful interference to radio communications. However, there is no guarantee that interference will not occur in a particular installation. If this equipment does cause harmful interference to radio or television reception, which can be determined by turning the equipment off and on, the user is encouraged to try to correct the interference by one of the following measures:

1. Reorient or relocate the receiving antenna.
2. Increase the separation between the equipment and receiver.
3. Connect the equipment into an outlet on a circuit different from that to which the receiver is connected.
4. Consult the dealer or an experienced radio / TV technician for help.

Innovation, Science and Economic Development Canada (ISED)

This device complies with License-exempt RSS standard(s).

Operation is subject to the following two conditions:

1. This device may not cause interference; and
2. This device must accept any interference, including interference that may cause undesired operation of the device.

This Class B digital apparatus complies with Canadian ICES-003(B) / NMB-003(B).

Innovation, Sciences et Développement économique Canada (Français)

Cet appareil est conforme aux normes d'exemption de licence RSS.

Son fonctionnement est soumis aux deux conditions suivantes:

1. cet appareil ne doit pas causer d'interférence, et
2. cet appareil doit accepter toute interférence, notamment les interférences qui peuvent affecter son fonctionnement.

Cet appareil numérique de la classe B est conforme à la norme NMB-003 du Canada.

Japanese approvals

In the frequency band used for this device, campus radio stations (radios stations that require a license) and specified low power radio stations (radio stations that do not require license) for mobile identification and amateur radio stations (radio stations that require license) used in industries such as microwave ovens, scientific, medical equipment devices and production line of other factories are also being operated.

1. Before using this device, please make sure that campus radio stations and specified low power radio stations for mobile

identification and amateur radio stations are not being operated nearby.

2. In case there is any case of harmful interference to campus radio stations for mobile identification caused by this device, please immediately change the frequency used or stop the transmission of radio waves and then consult about the measures to avoid interference (for example, the installation of partitions) through the contact information below.

3. Besides, when in trouble, such as when there is any case of harmful interference to specified low power radio stations for mobile identification or amateur radio stations caused by this device, please consult through the following contact information.

Contact information: Please contact your local authorized Raymarine dealer.

MSIP Warning Statement for Radio Devices (Korea only)

- 제작자 및 설치자는 해당 무선설비가 전파혼신 가능성이 있으므로 안전 인명과 관련된
- 서비스는 할 수 없음을 사용자 설명서 등을 통하여 운용자 및 사용자에게 충분히 알릴 것
- 법에 의해 전 방향 전파 발사 및 동일한 정보를 동시에 여러 곳으로 송신하는 점-대-다지점 서비스에의 사용은 금지되어 있습니다.

Product disposal

Dispose of this product in accordance with the WEEE Directive.

The Waste Electrical and Electronic Equipment (WEEE) Directive requires the recycling of waste electrical and electronic equipment which contains materials, components and substances that may be hazardous and present a risk to human health and the environment when WEEE is not handled correctly.

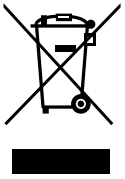

Equipment marked with the crossed-out wheeled bin symbol indicates that the equipment should not be disposed of in unsorted household waste. Local authorities in many regions have established collection schemes under which residents can dispose of waste electrical and electronic equipment at a recycling center or other collection point. For more information about suitable collection points for waste electrical and electronic equipment in your region, refer to the Raymarine website: https://bit.ly/rym-recycling

IMO and SOLAS

The equipment described within this document is intended for use on leisure marine boats and workboats NOT covered by International Maritime Organization (IMO) and Safety of Life at Sea (SOLAS) Carriage Regulations.

Warranty policy and registration

Visit the Raymarine website to **read the latest warranty policy**, and **register** your product's warranty online: www.bit.ly/rym-warranty

It is important that you register your product to receive full warranty benefits. Your product package includes a barcode label indicating the serial number of the unit. This serial number is also provided on a label affixed to the product itself. You will need this serial number when registering your product online.

Technical accuracy

To the best of our knowledge, the information in this document was correct at the time it was produced. However, Raymarine cannot accept liability for any inaccuracies or omissions it may contain. In addition, our policy of continuous product improvement may change specifications without notice. As a result, Raymarine cannot accept liability for any differences between the product and this document. Please check the Raymarine website to ensure you have the most up-to-date version(s) of the documentation for your product: www.docs.raymarine.com

Publication copyright

Copyright ©2026 Teledyne Raymarine UK Limited. All rights reserved. No parts of this material may be copied, translated, or transmitted (in any medium) without the prior written permission of Teledyne Raymarine UK Limited.

CHAPTER 2: DOCUMENT INFORMATION

CHAPTER CONTENTS

- 2.1 Document information (page 17)
- 2.2 Applicable products (page 17)
- 2.3 Product documentation (page 18)

2.1 Document information

This document contains important information related to the installation of your Raymarine product.

The document includes information to help you:

- Plan your installation and ensure you have all the necessary equipment.
- Install and connect your product as part of a wider system of connected marine electronics.
- Troubleshoot problems and obtain technical support if required.

This and other Raymarine product documents are available to download in PDF format from www.bit.ly/rym-docs

2.2 Applicable products

This document is applicable to the following products:



Axiom 7"

Part	Name	Description
E70363	Axiom 7"	7” Chartplotter.
E70363-DISP	Axiom 7"	7” Chartplotter (supplied with rear mounting kit only).
E70364	Axiom 7" DV	7” Chartplotter with built-in DownVision sonar module.
E70364-01	Axiom 7" DV plus CPT-S Transom	7” Chartplotter with built-in DownVision sonar module (supplied with a CPT-S Transom mount transducer).
E70364-02	Axiom 7" DV plus CPT-100DVS	7” Chartplotter with built-in DownVision sonar module (supplied with a CPT-100DVS DownVision® transducer).
E70364-DISP	Axiom 7" DV	7” Chartplotter with built-in DownVision sonar module (supplied with rear mounting kit only).
E70365	Axiom 7" RV 3D	7” Chartplotter with built-in RealVision 3D sonar module.
E70365-03	Axiom 7" RV 3D plus RV-100	7” Chartplotter with built-in RealVision 3D sonar module (supplied with a RV-100 transom transducer).
E70365-DISP	Axiom 7" RV 3D	7” Chartplotter with built-in RealVision 3D sonar module (supplied with rear mounting kit only)

Axiom 9"

Part	Name	Description
E70366	Axiom 9"	9” Chartplotter.
E70366-DISP	Axiom 9"	9” Chartplotter (supplied with rear mounting kit only).
E70367	Axiom 9" RV 3D	9” Chartplotter with built-in RealVision 3D sonar module.

Part	Name	Description
E70367-02	Axiom 9" RV 3D plus CPT-100DVS	9” Chartplotter with built-in RealVision 3D sonar module (supplied with a CPT-100DVS DownVision® transducer).
E70367-03	Axiom 9" RV 3D plus RV-100	9” Chartplotter with built-in RealVision 3D sonar module (supplied with an RV-100 transducer).
E70367-DISP	Axiom 9" RV 3D	9” Chartplotter with built-in RealVision 3D sonar module (supplied with rear mounting kit only).

Axiom 12"

Part	Name	Description
E70368	Axiom 12"	12” Chartplotter
E70368-DISP	Axiom 12"	12” Chartplotter (supplied with rear mounting kit only)
E70369	Axiom 12" RV 3D	12” Chartplotter with built-in RealVision 3D sonar module.
E70369-03	Axiom 12" RV 3D plus RV-100	12” Chartplotter with built-in RealVision 3D sonar module (supplied with a RV-100 transducer).
E70369-DISP	Axiom 12" RV 3D	12” chartplotter with built-in RealVision 3D sonar module (supplied with rear mounting kit only).

2.3 Product documentation

The following documentation is applicable to your product:

Document	Description
87298	Axiom Installation instructions (this document)
87295	Axiom 7" Surface / Flush mounting template
87296	Axiom 9" Surface / Flush mounting template
87297	Axiom 12" Surface / Flush mounting template
87304	Axiom Front installation kit instructions
87316	Legacy MFD / chartplotter to Axiom adaptor plates installation instructions
87317	RCR-SDUSB Installation instructions
81406	LightHouse 4 Advanced operation instructions
81370	LightHouse 3 Advanced operation instructions

These and other Raymarine product documents are available from https://bit.ly/rym-docs

Operation instructions

For detailed operation instructions for your product, refer to the documentation that accompanies your display.

Document	Description	Link
81406	LightHouse 4 Operation Instructions	www.bit.ly/LH4-docs
81370	LightHouse 3 Operation Instructions	www.bit.ly/LH3-docs

CHAPTER 3: PRODUCT AND SYSTEM OVERVIEW

CHAPTER CONTENTS

- 3.1 Product overview (page 20)
- 3.2 Minimum required LightHouse software version (page 20)
- 3.3 Typical systems (page 21)

3.1 Product overview

Axiom is a range of touchscreen glass bridge-style multifunction displays / chartplotters.

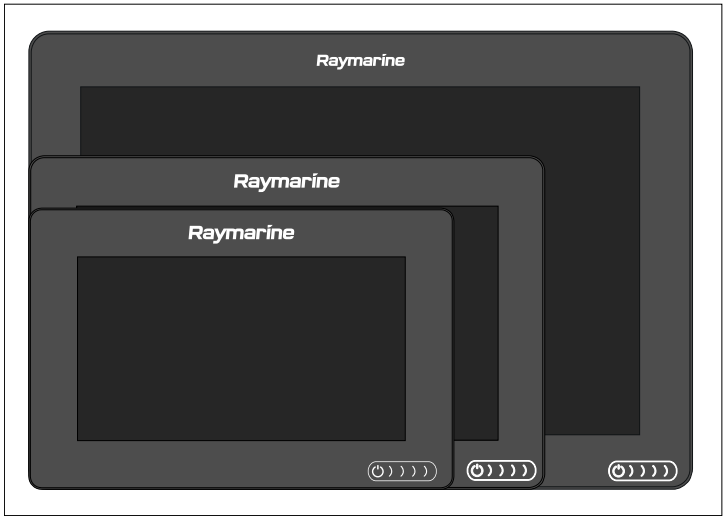

Axiom features include:

- Full range of navigation, sonar, radar, data, entertainment and other apps available, via the embedded LightHouse operating system.
- Extensive electronic chart compatibility, including LightHouse Charts Gen 2, Navionics®, C-MAP®, Imray, and more.
- Available in 7, 9 and 12 inch screen sizes.
- Quad-core (4-core) processor.
- 4 Gbyte internal solid state storage.
- High brightness (up to 1800 nits) multi-point touchscreen display, with the following screen resolution:
  - Axiom 7": 800 x 480 (WVGA)
  - Axiom 9": 800 x 480 (WVGA)
  - Axiom 12": 1280 x 800 (WXGA)
- Wide viewing angles.
- DV display variants include an internal DownVision sonar module and a 600W CHIRP sonar module, which can be connected to compatible transducers via the 9-pin transducer connector on the rear of the display.
- Wireless digital audio output (via Bluetooth connection to external third-party Bluetooth speaker / sound system).
- RV 3D display variants include an internal RealVision 3D sonar module and a 600W CHIRP sonar module, which can be connected directly to compatible transducers via the 25-pin transducer connector on the rear of the display.
- RayNet (Ethernet) connection, which supports 10/100 Mbits/s data transfer speeds.
- NMEA 2000 DeviceNet connection (or SeaTalk NG via the supplied adaptor cable).
- NMEA 0183 connection available, via an optional NMEA 0183 to NMEA 2000 converter (part number: A80721).
- Built-in high-performance GNSS receiver, with fast 10 Hz position updates.
- Smart vessel monitoring and control, including engine integration, NMEA 2000, and digital switching support.
- MicroSD card reader.
- Micro-USB connection, for use with an optional Remote Card Reader (RCR) accessory.
- Waterproof to IPx6 (suitable for above or below decks installation).

3.2 Minimum required LightHouse software version

Minimum LightHouse software version required for compatibility with Axiom MFDs / chartplotters.

LightHouse Generation	Minimum version required
LightHouse 3:	v3.0.40
LightHouse 4:	v4.0.70

Important:

• Axiom MFDs / chartplotters are NOT compatible with LightHouse 5. Mixed systems containing chartplotters running LightHouse 4 and chartplotters running LightHouse 5 are NOT supported.

• To ensure access to the latest features and full compatibility with your connected Raymarine devices, it is **highly recommended** that you upgrade the software on your MFD / chartplotter to the latest available version of LightHouse 4: www.bit.ly/LH4-download

3.3 Typical systems

Examples of typical systems.

Note:
Power supply connections are not shown in the following example. For details on how to connect power to your devices, refer to the power connection details in the applicable device instructions.

Example basic system

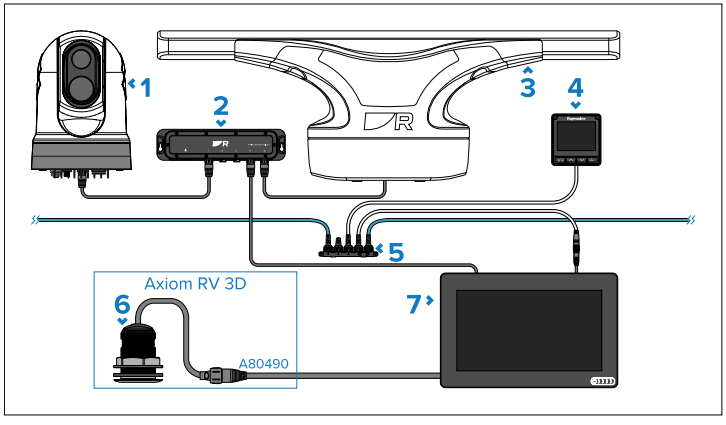

1. Raymarine thermal camera (M300 illustrated).
2. Raymarine network switch (RNS-5 illustrated).
3. Raymarine Radar scanner (Cyclone illustrated).
4. SeaTalk NG instrument (i70s illustrated).
5. SeaTalk NG 5-way block (terminated SeaTalk NG CAN bus network).
6. Example Raymarine transducer (CPT-S Thru-Hull illustrated), compatible with Axiom RV 3D (via the use of an adaptor cable) and Axiom DV display variants.
7. Axiom display.

Note:
Power supply connections are not shown in the following example. For details on how to connect power to your devices, refer to the power connection details in the applicable device instructions.

Example expanded system

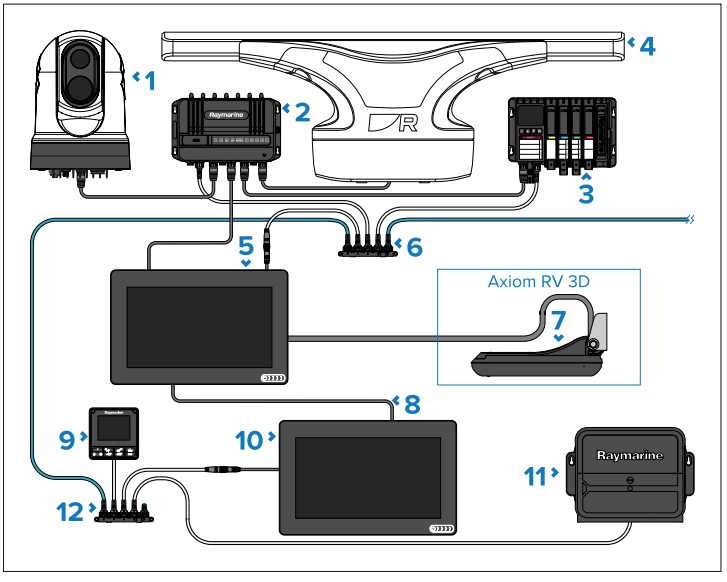

1. Raymarine thermal camera (M300 illustrated).
2. YachtSense Link Marine Router.
3. YachtSense DCS (Master module assembly illustrated).
4. Raymarine Radar scanner (Cyclone illustrated).
5. Axiom display.

6. SeaTalk NG 5-way block (terminated SeaTalk NG CAN bus network).
7. Example Raymarine transducer (RV-100 illustrated), compatible with Axiom RV 3D display variants.
8. RayNet (Ethernet) network connection between Raymarine displays.
9. Autopilot controller (p70s illustrated).
10. (Additional) Axiom display.
11. ACU-Series Evolution autopilot (drive and EV sensor not shown).
12. SeaTalk NG 5-way block (terminated SeaTalk NG CAN bus network).

Note:
Only the Datamaster chartplotter requires a connection to the NMEA 2000 / SeaTalk NG network. Other chartplotters can be connected for data redundancy, however only the Datamaster chartplotter will receive data from NMEA 2000 / SeaTalk NG devices. The Datamaster chartplotter can bridge the data over the RayNet (Ethernet) network to other chartplotters in the system.

CHAPTER 4: COMPATIBLE TRANSDUCERS

CHAPTER CONTENTS

- 4.1 Axiom RV 3D variant — compatible transducers (page 24)
- 4.2 Axiom DV variant — compatible transducers (page 27)

4.1 Axiom RV 3D variant — compatible transducers

Axiom RV 3D variant chartplotters include a built-in sonar module which can be connected to compatible transducers using the 25-pin transducer connector on the rear of the display.

Compatible transducers:

- RealVision 3D transducers.
- DownVision transducers (via the use of an adaptor cable).
- CPT-S-Series conical beam transducers (via the use of an adaptor cable).
- Non-CHIRP transducers (via the use of an adaptor cable).

For more information on the adaptor cables which are separately available, refer to:

- **p.118 — Spares and accessories**

Note:
Axiom Chartplotter only display variants must be connected to a separate sonar module in order for sonar features to be enabled.

Required cables — RealVision 3D transducers

- RealVision transducers connect directly to the product's 25-pin transducer connector.
- RealVision split-pair transducers are supplied with a Y-cable (part number: A80478) and extension cable (part number: A80477) to connect both transducers to the product's 25-pin transducer connector.

RealVision 3D transducers

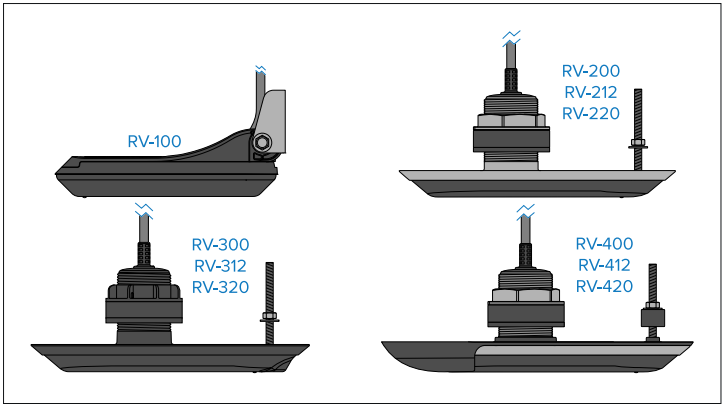

Transom mount transducers

Part	Description
A80464	**RV-100** RealVision plastic transducer

Thru-hull mount transducers

Part	Description
A80465	**RV-200** RealVision bronze 0° transducer
T70318: A80466 A80467	**RV-212P** / **RV-212S** RealVision bronze 12° split-pair transducers
T70319: A80468 A80469	**RV-220P** / **RV-220S** RealVision bronze 20° split-pair transducers
A80470	**RV-300** RealVision plastic 0° transducer
T70320: A80471 A80472	**RV-312P** / **RV-312S** RealVision plastic 12° split-pair transducers
T70321: A80473 A80474	**RV-320P** / **RV-320S** RealVision plastic 20° split-pair transducers

Part	Description
A80615	**RV-400** RealVision stainless steel 0° transducer
T70450: A80616 A80617	**RV-412P** / **RV-412S** RealVision stainless steel 12° split-pair transducers
T70451: A80618 A80619	**RV-420P** / **RV-420S** RealVision stainless steel 20° split-pair transducers

Required cables — DownVision transducers

DownVision transducers require an adapter cable (part number: A80490), and connect to the product's 25-pin transducer connector.

DownVision transducers

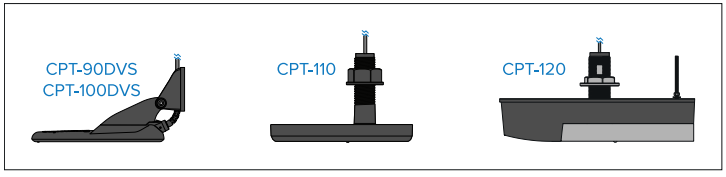

Transom mount transducers

Part	Description
A80507	**CPT-90DVS** DownVision plastic transducer
A80351	**CPT-100DVS** DownVision plastic transducer

Thru-hull mount transducers

Part	Description
A80277	**CPT-110** plastic transducer
A80350	**CPT-120** bronze transducer

Required cables — CPT-S-Series conical beam transducers

- CPT-S-Series transducers require an adapter cable (part number: A80490), and connect to the product's 25-pin transducer connector.
- CPT-S-Series transducers do **NOT** offer DownVision capabilities.

CPT-S-Series conical beam transducers

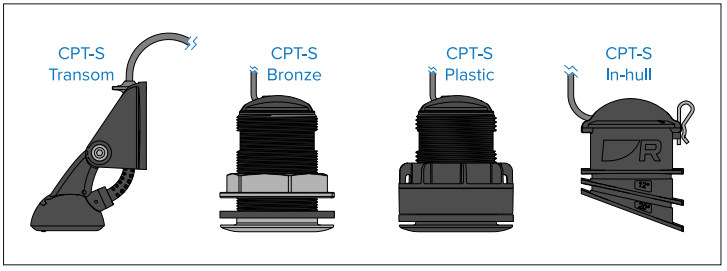

Transom mount transducers

Part	Description
E70342	**CPT-S Transom** plastic transducer

Thru-hull mount transducers

Part	Description
E70339	**CPT-S Thru-Hull 0°** Angled element plastic transducer
A80448	**CPT-S Thru-Hull 12°** Angled element plastic transducer
A80447	**CPT-S Thru-Hull 20°** Angled element plastic transducer
A80446	**CPT-S Thru-Hull 0°** Angled element bronze transducer
E70340	**CPT-S Thru-Hull 12°** Angled element bronze transducer
E70341	**CPT-S Thru-Hull 20°** Angled element bronze transducer

In-hull mount transducers

Part	Description
A80691	**CPT-S In-Hull** plastic transducer

Required cables — Traditional transducers

Traditional transducers require an adapter cable (part number: A80489), and connect to the product's 25-pin transducer connector.

Traditional transducers

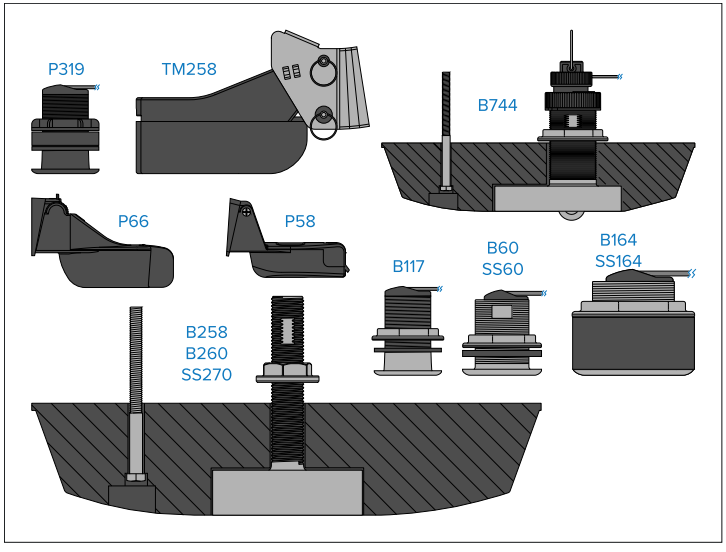

Transom mount transducers

Part	Description
E66084	**TM258** plastic transducer
A80566	**P58** plastic transducer
E66054	**P66** plastic transducer

Thru-hull mount transducers

Part	Description
E66013	**P319** plastic transducer
E66014	**B117** bronze transducer
E66086	**B60 12°** angled element bronze transducer
E66085	**B60 20°** angled element bronze transducer
A80568	**SS60 0°** angled element stainless steel transducer
A80569	**SS60 12°** angled element stainless steel transducer
A80570	**SS60 20°** angled element stainless steel transducer
A102137	**B164 0°** angled element bronze transducer
A102112	**B164 12°** angled element bronze transducer
A102113	**B164 20°** angled element bronze transducer
A80451	**SS164 0°** angled element stainless steel transducer
A66098	**SS164 12°** angled element stainless steel transducer
A66099	**SS164 20°** angled element stainless steel transducer
A66091	**B744V** bronze transducer
A66092	**B744VL** bronze transducer
E66082	**B258** bronze transducer
A102121	**SS270W** bronze transducer
E66079	**B260** bronze transducer

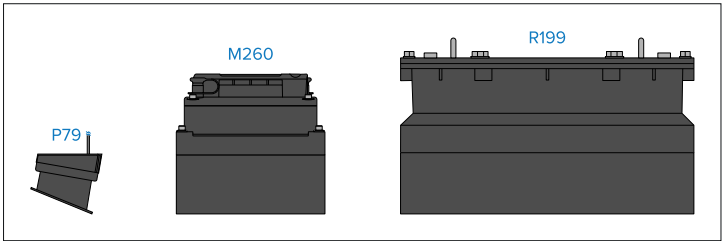

In-hull mount transducers

Part	Description
E66008	**P79** plastic transducer
A66089	**M260** plastic transducer
E66076	**R199** plastic transducer

4.2 Axiom DV variant — compatible transducers

Axiom DV variant multifunction displays (MFDs) include a built-in sonar module which can be connected to compatible transducers using the 9-pin transducer connector on the rear of the display.

Compatible transducers:

- DownVision transducers.
- CPT-S-Series conical beam transducers.
- Non-CHIRP transducers (via the use of an adaptor cable).

For more information on the adaptor cables which are separately available, refer to:

- **p.118 — Spares and accessories**

Note:
Axiom Chartplotter only display variants must be connected to a separate sonar module in order for sonar features to be enabled.

Required cables — DownVision transducers

DownVision transducers connect directly to the product's 9-pin transducer connector.

DownVision transducers

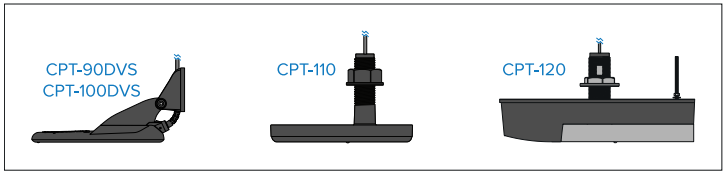

Transom mount transducers

Part	Description
A80507	**CPT-90DVS** DownVision plastic transducer
A80351	**CPT-100DVS** DownVision plastic transducer

Thru-hull mount transducers

Part	Description
A80277	**CPT-110** plastic transducer
A80350	**CPT-120** bronze transducer

Required cables — CPT-S-Series conical beam transducers

- CPT-S-Series transducers connect directly to the product's 9-pin transducer connector.
- CPT-S-Series transducers do **NOT** offer DownVision capabilities.

CPT-S-Series conical beam transducers

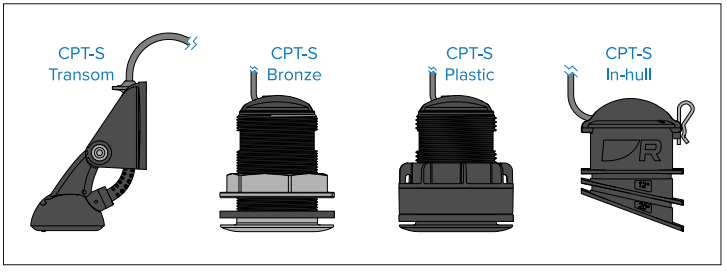

Transom mount transducers

Part	Description
E70342	**CPT-S Transom** plastic transducer

Thru-hull mount transducers

Part	Description
E70339	**CPT-S Thru-Hull 0°** Angled element plastic transducer
A80448	**CPT-S Thru-Hull 12°** Angled element plastic transducer
A80447	**CPT-S Thru-Hull 20°** Angled element plastic transducer

Part	Description
A80446	**CPT-S Thru-Hull 0°** Angled element bronze transducer
E70340	**CPT-S Thru-Hull 12°** Angled element bronze transducer
E70341	**CPT-S Thru-Hull 20°** Angled element bronze transducer

In-hull mount transducers

Part	Description
A80691	**CPT-S In-Hull** plastic transducer

Required cables — Traditional transducers

Traditional transducers require an adapter cable (part number: A80485), and connect to the product's 9-pin transducer connector.

Traditional transducers

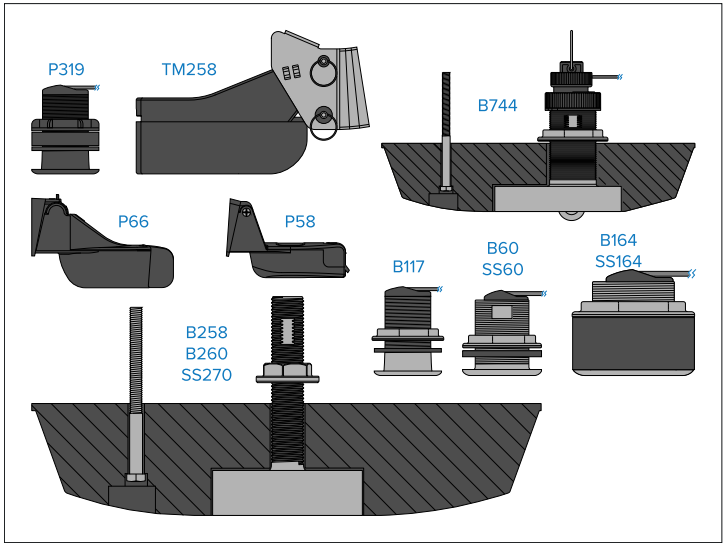

Transom mount transducers

Part	Description
E66084	**TM258** plastic transducer
A80566	**P58** plastic transducer
E66054	**P66** plastic transducer

Thru-hull mount transducers

Part	Description
E66013	**P319** plastic transducer
E66014	**B117** bronze transducer
E66086	**B60 12°** angled element bronze transducer
E66085	**B60 20°** angled element bronze transducer
A80568	**SS60 0°** angled element stainless steel transducer
A80569	**SS60 12°** angled element stainless steel transducer
A80570	**SS60 20°** angled element stainless steel transducer
A102137	**B164 0°** angled element bronze transducer
A102112	**B164 12°** angled element bronze transducer
A102113	**B164 20°** angled element bronze transducer
A80451	**SS164 0°** angled element stainless steel transducer
A66098	**SS164 12°** angled element stainless steel transducer
A66099	**SS164 20°** angled element stainless steel transducer
A66091	**B744V** bronze transducer
A66092	**B744VL** bronze transducer
E66082	**B258** bronze transducer
A102121	**SS270W** bronze transducer
E66079	**B260** bronze transducer

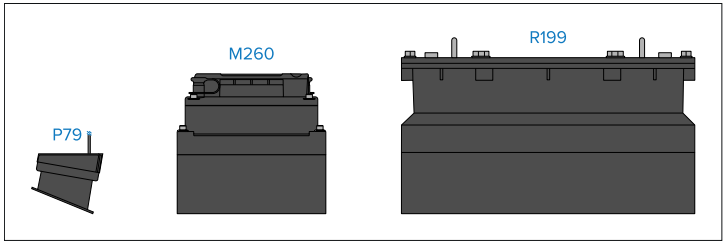

In-hull mount transducers

Part	Description
E66008	**P79** plastic transducer
A66089	**M260** plastic transducer
E66076	**R199** plastic transducer

CHAPTER 5: PARTS SUPPLIED

CHAPTER CONTENTS

- 5.1 Parts supplied — Axiom 7" (page 31)
- 5.2 Parts Supplied — Axiom 7" (DISP) (page 31)
- 5.3 Parts supplied — Axiom 9" and Axiom 12" (page 32)
- 5.4 Parts supplied — Axiom 9" and Axiom 12" (DISP) (page 32)
- 5.5 Inline fuse requirement (page 33)

5.1 Parts supplied — Axiom 7"

The parts listed are supplied with the following product numbers: E70363, E70364 and E70365.

Unpack your product carefully to prevent damage or loss of parts. Check the box contents against the list below. Retain the packaging and documentation for future reference.

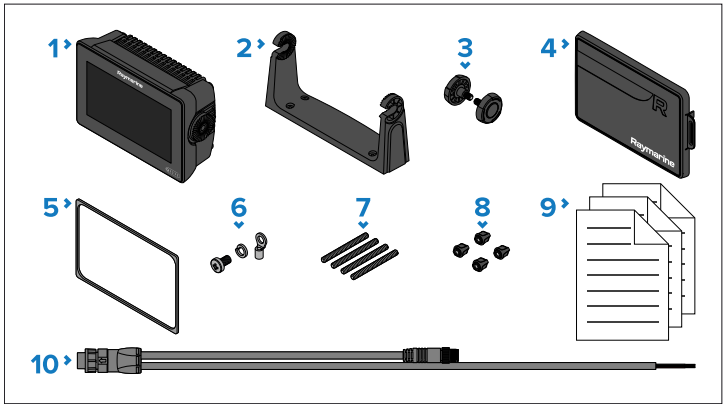

1. MFD / chartplotter (supplied with Trunnion adaptor fitted)
2. (1) Trunnion mounting bracket
3. Trunnion knobs x 2
4. Suncover — Trunnion mount
5. Panel mount gasket for surface / flush mounting
6. M3x5 screw, M3 spring washer and M3 crimp terminal (for optional grounding point connection).
7. M5x58 Threaded studs x 4
8. M5 Thumb nuts x 4
9. Documentation pack
10. Power / NMEA 2000 cable (with 1.5 m (4.92 ft) power connection and 0.5 m (1.64 ft) NMEA 2000 connection).

E70364-01 is also supplied with a CPT-S Transom transom transducer and associated fittings.

E70364-02 is also supplied with a DownVision CPT-100DVS transducer and associated fittings.

E70365-03 is also supplied with a RealVision 3D RV-100 transducer and associated fittings.

Note:
(1) Fixings to secure the trunnion bracket to a mounting surface are not provided. 4 x self-tapping screws are required. The screws should be suitable for the mounting surface material and the 4.20 mm (0.17 in) diameter mounting holes in the trunnion bracket.

5.2 Parts Supplied — Axiom 7" (DISP)

The parts listed are supplied with the following product numbers: E70363-DISP, E70364-DISP and E70365-DISP.

Unpack your product carefully to prevent damage or loss of parts. Check the box contents against the list below. Retain the packaging and documentation for future reference.

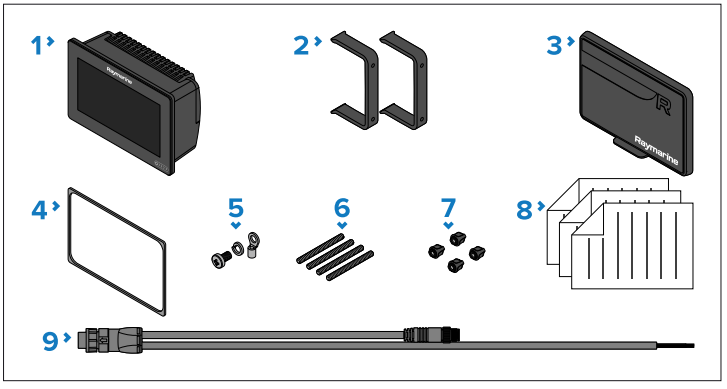

1. MFD / chartplotter
2. Rear mount brackets x 2
3. Suncover — Surface mount
4. Panel mount gasket for surface / flush mounting
5. M3x5 screw, M3 spring washer and M3 crimp terminal (for optional grounding point connection)
6. M5x58 Threaded studs x 4
7. M5 Thumb nuts x 4

8. Documentation pack
9. Power / NMEA 2000 cable (with 1.5 m (4.92 ft) power connection and 0.5 m (1.64 ft) NMEA 2000 connection).

5.3 Parts supplied — Axiom 9" and Axiom 12"

The parts listed are supplied with the following product numbers: E70366, E70367, E70368 and E70369.

Unpack your product carefully to prevent damage or loss of parts. Check the box contents against the list below. Retain the packaging and documentation for future reference.

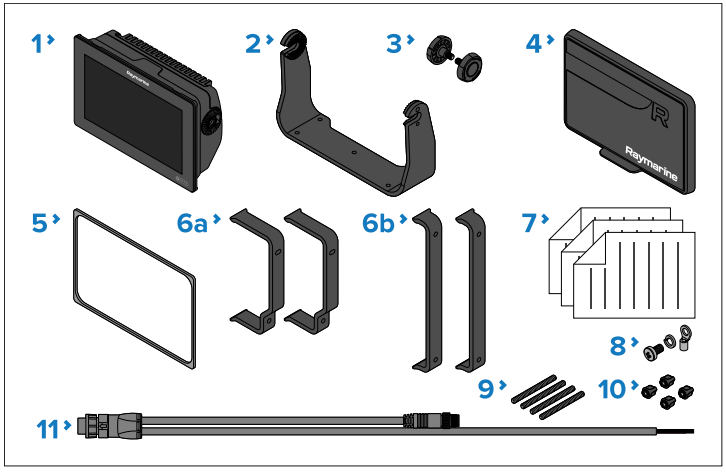

1. MFD / chartplotter
2. (1) Trunnion mounting bracket
3. Trunnion knobs x 2
4. Suncover
5. Panel mount gasket for surface / flush mounting
6. Rear mounting brackets:
   a. supplied with 9” MFD / chartplotter
   b. supplied with 12” MFD / chartplotter
7. Documentation pack
8. M3x5 screw, M3 spring washer and M3 crimp terminal (for optional grounding point connection)
9. M5x58 Threaded studs x 4
10. M5 Thumb nuts x 4
11. Power / NMEA 2000 cable (with 1.5 m (4.92 ft) power connection and 0.5 m (1.64 ft) NMEA 2000 connection).

E70367-02 is also supplied with a DownVision CPT-100DVS transducer and associated fittings.

E70367-03 is also supplied with a RealVision 3D RV-100 transducer and associated fittings.

E70369-03 is also supplied with a RealVision 3D RV-100 transducer and associated fittings.

Note:
(1) Fixings to secure the trunnion bracket to a mounting surface are not provided. 5 x self-tapping screws are required. The screws should be suitable for the mounting surface material and the 5.75 mm (0.23 in) diameter mounting holes in the trunnion bracket.

5.4 Parts supplied — Axiom 9" and Axiom 12" (DISP)

The parts listed are supplied with the following product numbers: E70366-DISP, E70367-DISP, E70368-DISP and E70369-DISP.

Unpack your product carefully to prevent damage or loss of parts. Check the box contents against the list below. Retain the packaging and documentation for future reference.

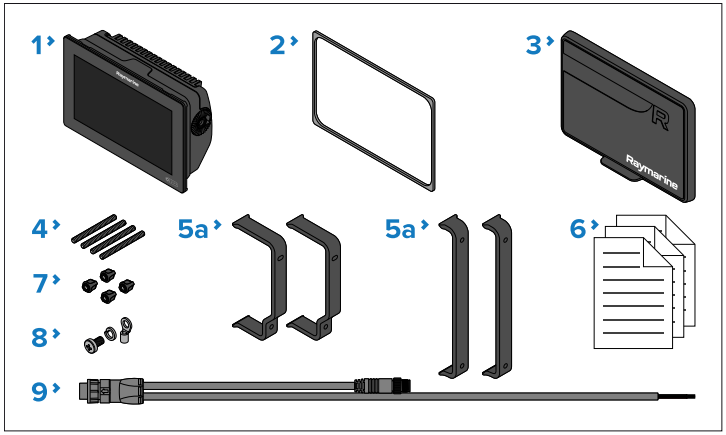

1. MFD / chartplotter
2. Panel mount gasket for surface / flush mounting
3. Suncover
4. M5x58 Threaded studs x 4
5. Rear mounting brackets:
   a. supplied with 9” MFD / chartplotter
   b. supplied with 12” MFD / chartplotter
6. Documentation pack
7. M5 Thumb nuts x 4
8. M3x5 screw, M3 spring washer and M3 crimp terminal (for optional grounding point connection)
9. Power / NMEA 2000 cable (with 1.5 m (4.92 ft) power connection and 0.5 m (1.64 ft) NMEA 2000 connection).

5.5 Inline fuse requirement

If your product is NOT supplied with an inline fuse (whether separately or fitted to the power cable), you MUST fit a suitably-rated inline fuse to your product’s red power wire, housed in a waterproof fuse holder.

The illustration below shows the two main types of inline fuse with waterproof holder, for use in marine electronics installations. Fuses in a variety of ratings are widely available at chandleries and marine electrical retailers.
Select one of the following fuse types to protect your product:

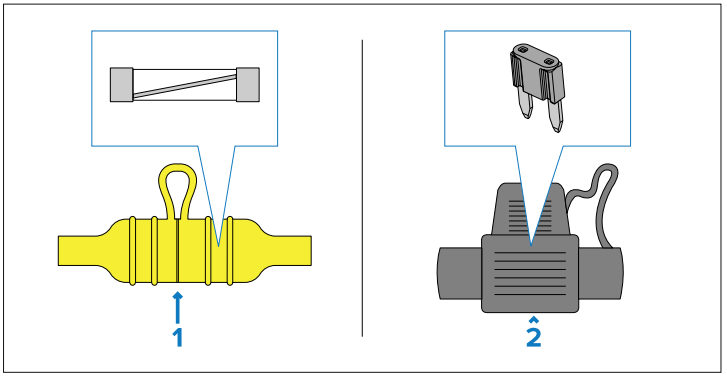

1. Waterproof fuse holder containing a “glass”-type inline fuse.
2. Waterproof fuse holder containing a “blade”-type inline fuse.

Fuse ratings:

- *Voltage rating* — must be equal to or greater than the voltage of your vessel’s power supply.
- *Current rating* — refer to the *Inline fuse and thermal breaker rating* section in this document.

CHAPTER 6: PRODUCT DIMENSIONS

CHAPTER CONTENTS

- 6.1 Axiom 7" trunnion mount dimensions (page 35)
- 6.2 Axiom 7" surface and flush mount dimensions (page 35)
- 6.3 Axiom 9" and 12" trunnion mount dimensions (page 36)
- 6.4 Axiom 9" and 12" surface and flush mount dimensions (page 37)

6.1 Axiom 7" trunnion mount dimensions

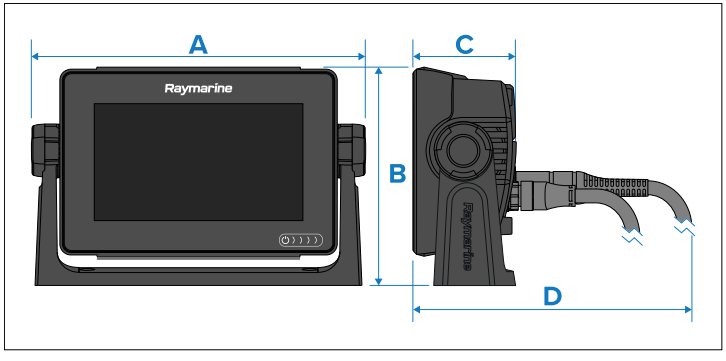

	Description
A	250.4 mm (9.86 in)
B	162.5 mm (6.4 in)
C	76.4 mm (3 in)
D	• Straight connectors = 218 mm (8.58 in) • Right-angled connectors = 198 mm (7.79 in)

6.2 Axiom 7" surface and flush mount dimensions

Using adaptor bracket:

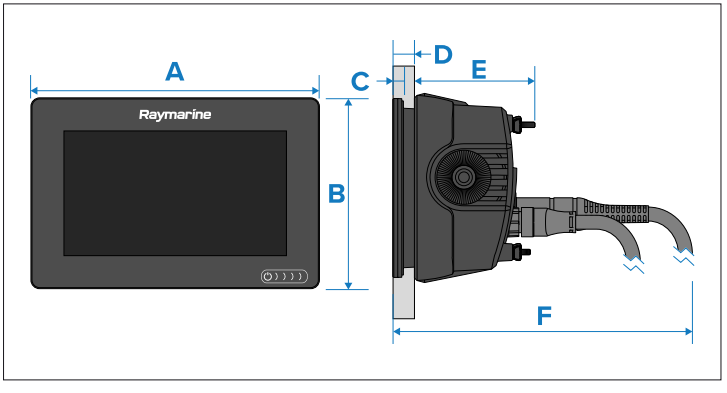

	Description
A	201.1 mm (7.92 in)
B	133 mm (5.24 in)
C	8 mm (0.32 in)
D	• Surface mounting = 19.05 mm (0.75 in) Maximum • Flush mounting = 27.05 mm (1.06 in) Maximum
E	93.10 mm (3.67 in)
F	• Straight connectors = 218 mm (8.58 in) • Right-angled connectors = 198 mm (7.79 in)

Using rear mounting kit:

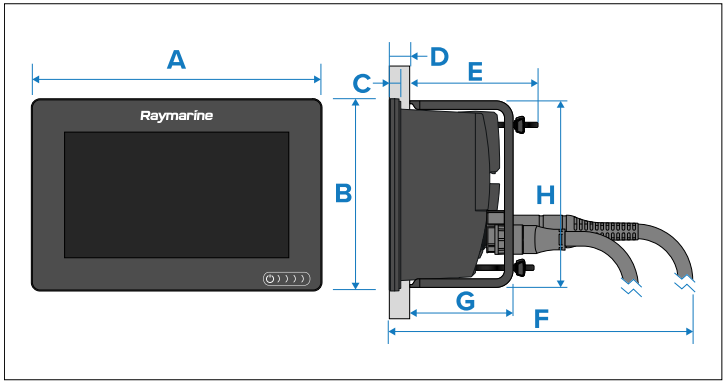

	Description
A	201.1 mm (7.92 in)
B	133 mm (5.24 in)
C	8 mm (0.32 in)
D	• Surface mounting = 19.05 mm (0.75 in) Maximum • Flush mounting = 27.05 mm (1.06 in) Maximum
E	93.10 mm (3.67 in)
F	• Straight connectors = 218 mm (8.58 in) • Right-angled connectors = 198 mm (7.79 in)
G	73 mm (2.87 in)
H	132 mm (5.2 in)

6.3 Axiom 9" and 12" trunnion mount dimensions

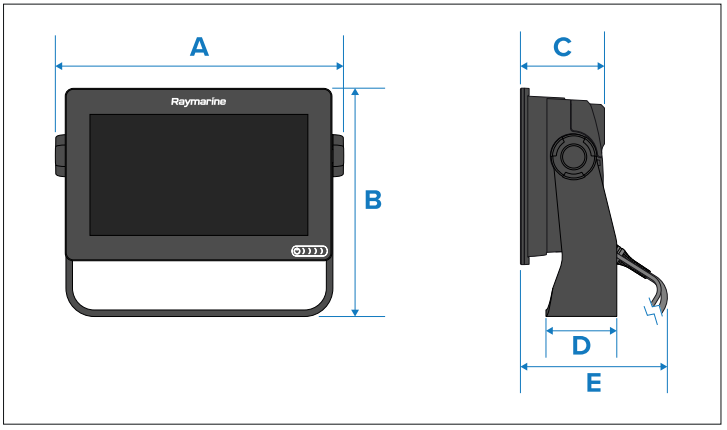

	Axiom 9"	Axiom 12"
A	265.03 mm (10.43 in)	314 mm (12.36 in)
B	187.81 mm (7.39 in)	226.72 mm (8.93 in)
C	76.71 mm (3.02 in)	76.2 mm (3 in)
D	65 mm (2.56 in)	65 mm (2.56 in)
E	• Straight connectors = 178 mm (7.01 in) • Right-angled connectors = 158 mm (6.22 in)	• Straight connectors = 178 mm (7.01 in) • Right-angled connectors = 158 mm (6.22 in)

6.4 Axiom 9" and 12" surface and flush mount dimensions

Note:
The appearance of the brackets that are supplied with your display may differ from what is shown in the illustration below.

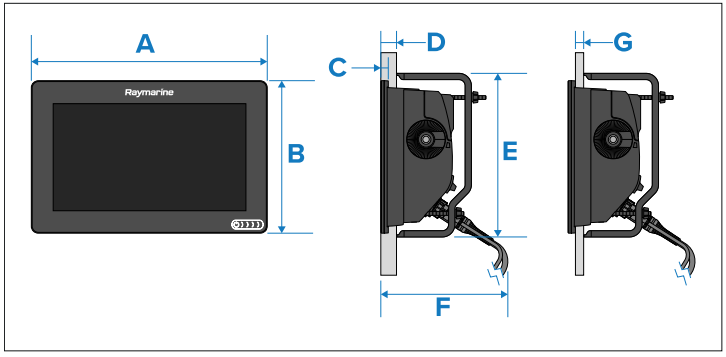

	Axiom 9"	Axiom 12"
A	244.08 mm (9.64 in)	314 mm (12.36 in)
B	157.78 mm (6.21 in)	217 mm (8.54 in)
C	8 mm (0.31 in)	8 mm (0.31 in)
D	27.05 mm (1.06 in) Maximum	27.05 mm (1.06 in) Maximum
E	157 mm 6.18 in)	222 mm (8.74 in)
F	178 mm (7.01 in)	178 mm (7.01 in)
G	19.05 mm (0.75 in) Maximum	19.05 mm (0.75 in) Maximum

CHAPTER 7: LOCATION REQUIREMENTS

CHAPTER CONTENTS

- 7.1 Warnings and cautions (page 39)
- 7.2 General location requirements (page 39)
- 7.3 EMC installation guidelines (page 39)
- 7.4 RF interference (page 40)
- 7.5 Compass safe distance (page 40)
- 7.6 GNSS (GPS) location requirements (page 40)
- 7.7 Touchscreen location requirements (page 41)
- 7.8 Wireless location requirements for optimum performance (page 42)
- 7.9 Viewing angle considerations (page 43)

7.1 Warnings and cautions

Important:
Before proceeding, ensure that you have read and understood the warnings and cautions provided in the following section of this document:

• p.10 — Important information



Warning: Potential ignition source

This product is NOT approved for use in hazardous/flammable atmospheres. Do NOT install in a hazardous/flammable atmosphere (such as in an engine room or near fuel tanks).



Warning: Switch off power supply

Ensure that the vessel's power supply is switched OFF before starting to install this product. Do NOT connect or disconnect equipment with the power switched on, unless instructed to do so in this document.

Caution: Product weight

• Refer to the technical specification for your product to ensure the intended mounting surface is suitable to bear its weight.

• 2 people may be required for installation of larger / heavier products.

7.2 General location requirements

When selecting a location for your product it is important to consider a number of factors.

Factors for consideration:

- **Ventilation** — To ensure adequate airflow:
  - Ensure that product is mounted in a compartment of suitable size.
  - Ensure that ventilation holes are not obstructed. Allow adequate separation of all equipment.

  Any specific requirements for each system component are provided later in this chapter.
- **Mounting surface** — Ensure product is adequately supported on a secure surface. Do not mount units or cut holes in places which may damage the structure of the vessel.
- **Cabling** — Ensure the product is mounted in a location which allows proper routing, support and connection of cables:
  - Minimum bend radius of 100 mm (3.94 in) unless otherwise stated.
  - Use cable clips to prevent stress on connectors.
  - If your installation requires multiple ferrites to be added to a cable then additional cable clips should be used to ensure the extra weight of the cable is supported.
- **Water ingress** — The product is suitable for mounting both above and below decks. Although the unit is waterproof, it is good practice to locate it in a protected area away from prolonged and direct exposure to rain and salt spray.
- **Electrical interference** — Select a location that is far enough away from devices that may cause interference, such as motors, generators and radio transmitters / receivers.
- **Power supply** — Select a location that is as close as possible to the vessel's DC power source. This will help to keep cable runs to a minimum.

7.3 EMC installation guidelines

Raymarine equipment and accessories conform to the appropriate Electromagnetic Compatibility (EMC) regulations, to minimize electromagnetic interference between equipment and minimize the effect such interference could have on the performance of your system.

Correct installation is required to ensure that EMC performance is not compromised.

Note:
In areas of extreme EMC interference, some slight interference may be noticed on the product. Where this occurs the product and the source of the interference should be separated by a greater distance.

For **optimum** EMC performance we recommend that wherever possible:

- Raymarine equipment and cables connected to it are:
  - At least 1 m (3.28 ft) from any equipment transmitting or cables carrying radio signals e.g. VHF radios, cables and antennas. In the case of SSB radios, the distance should be increased to 2 m (6.6 ft).
  - More than 2 m (6.56 ft) from the path of a radar beam. A radar beam can normally be assumed to spread 20 degrees above and below the radiating element.
- The product is supplied from a separate battery from that used for engine start. This is important to prevent erratic behavior and data loss which can occur if the engine start does not have a separate battery.
- Raymarine specified cables are used.
- Cables are not cut or extended, unless doing so is detailed in the installation manual.

Note:
Where constraints on the installation prevent any of the above recommendations, always ensure the maximum possible separation between different items of electrical equipment, to provide the best conditions for EMC performance throughout the installation.

7.4 RF interference

Certain third-party external electrical equipment can cause Radio Frequency (RF) interference with GNSS (GPS), AIS or VHF devices, if the external equipment is not adequately insulated and emits excessive levels of electromagnetic interference (EMI).

Some common examples of such external equipment include LED lighting (e.g.: navigation lights, searchlights and floodlights, interior and exterior lights) and terrestrial TV tuners.

To minimize interference from such equipment:

- Keep it as far away from GNSS (GPS), AIS or VHF products and their antennas as possible.
- Ensure that any power cables for external equipment are not entangled with the power or data cables for these devices.
- Consider fitting one or more high frequency suppression ferrites to the EMI-emitting device. The ferrite(s) should be rated to be effective in the range 100 MHz to 2.5 GHz, and should be fitted to the power cable and any other cables exiting the EMI-emitting device, as close as possible to the position where the cable exits the device.

7.5 Compass safe distance

To prevent potential interference with the vessel's magnetic compasses, ensure an adequate distance is maintained from the product.

When choosing a suitable location for the product, you must aim to maintain a distance of **at least** 1 m (3.3 ft.) in all directions from any compasses.

For some smaller vessels it may not be possible to locate the product this far away from a compass. In this situation, when choosing the installation location for your product, ensure that the compass is not affected by the product when it is in a powered on state.

7.6 GNSS (GPS) location requirements

In addition to general guidelines concerning the location of marine electronics, there are a number of environmental factors to consider when installing equipment with an internal GNSS (GPS) receiver.

Mounting location

- **Above Decks** (e.g. open air) mounting: Provides optimal performance. (For equipment with appropriate waterproof rating.)
- **Below Decks** (e.g. enclosed space) mounting: Performance may be less effective and may require an external antenna or receiver mounted above decks.

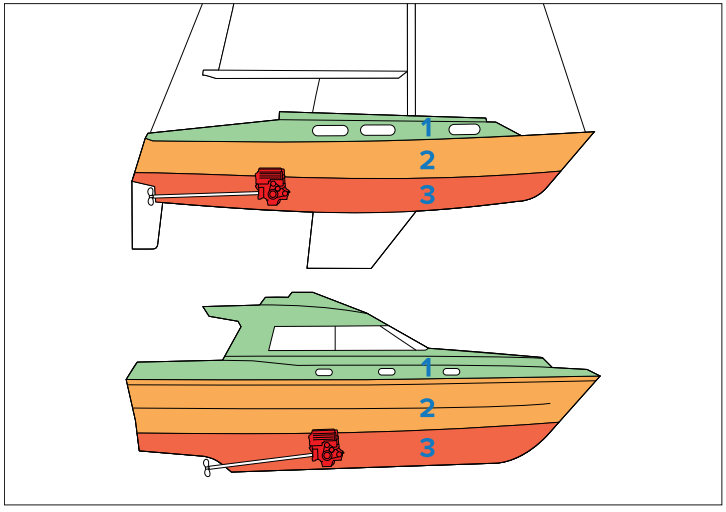

	Color	Location
1		This location provides optimal performance (above decks).
2		In this location, performance may be less effective.
3		This location is NOT recommended.

Vessel construction

The construction of your vessel can have an impact on performance. For example, the proximity of heavy structures such as a structural bulkhead, or the interior of larger vessels may result in a reduced signal. The construction materials can also have an impact. In particular, steel, aluminium or carbon surfaces can impact performance. Before locating equipment with an internal antenna below decks, or on a steel, aluminium or carbon construction vessel or surface, seek professional assistance.

Prevailing conditions

The weather and location of the vessel can affect performance. Typically calm clear conditions provide a more accurate position fix. Vessels at extreme northerly or southerly latitudes may also receive a weaker signal. An antenna mounted below decks will be more susceptible to performance issues related to the prevailing conditions.

7.7 Touchscreen location requirements

Important considerations when locating Touchscreen displays on a vessel.

Note:
Touchscreen performance can be affected by the installation environment. In particular, Touchscreen displays installed above decks where they will be exposed to environmental elements may exhibit the following:

- **Hot Touchscreen temperature** — If the display is mounted where it will be exposed to prolonged periods of direct sunlight, the touchscreen may become hot.
- **Erroneous Touchscreen performance** — Exposure to prolonged rain and / or water wash-over may cause the display to respond to ‘false touches’, caused by the rain / water hitting the screen.

If, due to the required installation location, exposure to these elements is expected, then it is recommended that you consider:

- (For touch-only displays) — Installing a remote keypad such as the RMK-10 and operating the display remotely.
- (For HybridTouch displays) — Locking the Touchscreen and using the physical buttons instead.
- Attaching a third-party ‘display hood accessory’ to reduce direct sunlight exposure and the volume of water that the display is exposed to.

7.8 Wireless location requirements for optimum performance

All wireless devices in your system must be located in such a way that they can reliably receive and/or transmit wireless signals.

A number of factors can influence wireless performance. For example, physical obstacles and certain vessel structures and materials can all negatively impact wireless performance. Therefore, **it's important to check a product's wireless performance at the desired installation location before drilling any mounting holes**.

Vessel construction and materials

Wherever possible, mount products on surfaces constructed from GRP (e.g. fiberglass resin, or foam), or on dry wooden bulkheads. **Conductive materials in the signal path can have a significant impact on wireless signal performance**. Reflective surfaces such as metal surfaces, some types of glass and even mirrors can drastically affect performance or even block the wireless signal. Installation locations that are in close proximity to these materials should be avoided. **Do NOT mount wireless products directly to conductive materials.** This includes any mounting surface or enclosure/pod. Examples of conductive materials include, but are not limited to:

- carbon fibre, kevlar, or aramid (including sails made from these materials)
- aluminium
- steel

In installations with conductive materials, if available, mount the wireless product using an accessory pole mount or deck mounting kit. A clearance of at least 10 cm (3.9 in) is required to minimize the ground effect from conductive materials. This applies to transmitters as well as displays. If moving the product fixes the problem, consider cutting an antenna clearance hole behind the unit (once the product position and mounting have been finalized).
Wireless performance can also be degraded in locations where the wireless signal passes through a bulkhead containing power cables. Crew members (especially when wet) can also be obstructive to wireless signals, if their bodies pass through the signal area between wireless sensor and any associated displays.

Checking and optimizing signal strength

It may be necessary to experiment with the location of your wireless products to achieve optimal wireless performance and a clear signal path.
The distance between wireless products should always be kept to a minimum. Do not exceed the maximum stated range of your wireless product (maximum range will vary for each device).
Wireless performance degrades over distance, so products farther away will receive less network bandwidth. Products installed close to their maximum wireless range may experience slow connection speeds, signal dropouts, or not being able to connect at all.
For best results, the wireless product should have a clear, direct line-of-sight to the product it will be connected to. Any physical obstructions can degrade or even block the wireless signal.
Some wireless products feature a signal strength indicator to assist in the process of determining the location with the best wireless performance. Choose the location with the highest and most consistently strong direct signal reading, during a 5 minute monitoring period. Try alternative locations for the transmitter to maximize the signal strength to the displays; e.g. try locations below a hatch or skylight or near to a window. A small change in product position can result in a significant change in the signal strength.

Note:
Some wireless products (e.g. a Hull Transmitter) will not transmit data unless a transducer is connected. Also consider that an NMEA or SeaTalk NG product (e.g. an interface) will not transmit data unless an appropriate data source is connected.

Interference and other equipment

Interference from other people's wireless devices can cause interference with your products. You can use a third-party wireless analyzer tool / smartphone app to assess the best wireless channel to use (e.g. a channel not in use or one used by the least number of devices).
Wireless products should be installed at least 1 m (3 ft) away from:

- Other wireless-enabled products
- Transmitting products that send wireless signals in the same frequency range
- Other electrical, electronic or electromagnetic equipment that may generate interference.

Software updates

It's also important to ensure all your wireless products are running the latest software versions, as improvements are made over time to wireless performance.

7.9 Viewing angle considerations

As display contrast and color are affected by the viewing angle, before choosing the mounting position of your display, it is recommended that you temporarily power up the display (prior to installation) and experiment with different installation locations, to enable you to best judge which location provides the optimum viewing angle for your specific installation.

For viewing angles for your product, refer to the *Technical specification*.

CHAPTER 8: MOUNTING OPTIONS

CHAPTER CONTENTS

- 8.1 Mounting options (page 45)

8.1 Mounting options

Several mounting options are available.

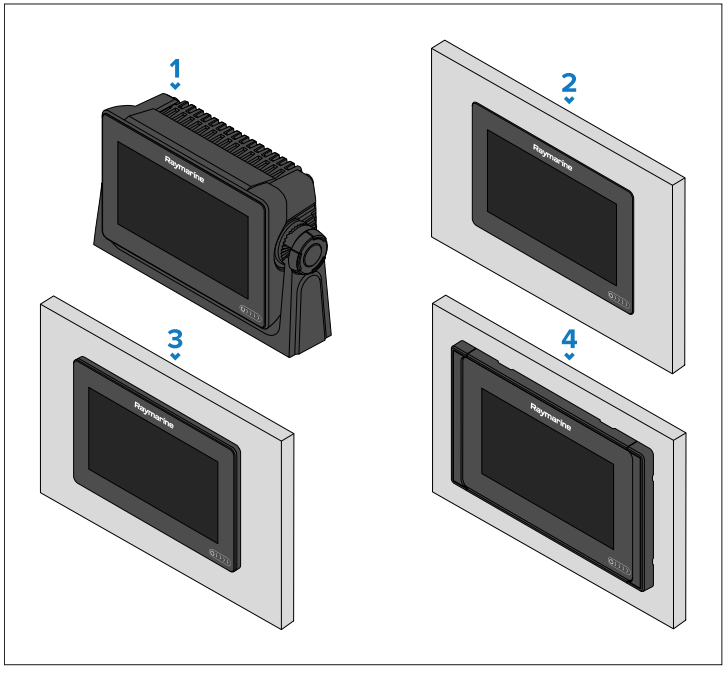

1. Trunnion mounting (used for mounting upright on a surface, or can be used for mounting overhead). For installation details, refer to: **p.46 — Trunnion bracket mounting**
2. Flush mounting (when flush mounted the front glass of the display will sit flush with the mounting surface). For installation details, refer to: **p.55 — Flush mounting**
3. Surface mounting (when surface mounted the display bezel will protrude from the mounting surface). For installation details, refer to: **p.49 — Surface mounting**
4. Front mounting — via the 'Front installation kit' accessory: 7"; A80498, 9"; A80500, 12"; A80502 (used to surface mount the display when access to the rear of the mounting surface is restricted). For installation details, refer to the documentation supplied with each installation kit.

Legacy chartplotter adaptor plates are also available to enable you to easily swap out older chartplotters for new Axiom chartplotters. For a list of available adaptors, refer to: **p.120 — Legacy chartplotter adaptor plates**

CHAPTER 9: TRUNNION MOUNTING

CHAPTER CONTENTS

- 9.1 Parts required (trunnion mount installations) (page 47)
- 9.2 Tools required (trunnion mount installations) (page 47)
- 9.3 Trunnion bracket mounting (page 48)

9.1 Parts required (trunnion mount installations)

The following parts are required to mount the display on a trunnion bracket.

Part	Axiom 7"	Axiom 9" / 12"
Trunnion adaptor	•	
Trunnion bracket	•	•
(1) Self-tapping screws (or other appropriate fixings)	•	•

Note:
(1) Fixings for trunnion mounting are NOT supplied, as the requirements will vary:

- **Axiom 7" display:** Requires 4x fixings, which must be suitable for the mounting surface material and the 4.20 mm (0.17 in) diameter trunnion bracket mounting holes.
- **Axiom 9" / 12" display:** Requires 5x fixings, which must be suitable for the mounting surface material and the 5.75 mm (0.23 in) diameter trunnion bracket mounting holes.

Note:
If you wish to trunnion mount your display and the required parts are NOT supplied with your product, refer to the following section:

- **p.118 — Spares and accessories**

9.2 Tools required (trunnion mount installations)

The following tools are recommended for mounting using a trunnion bracket:

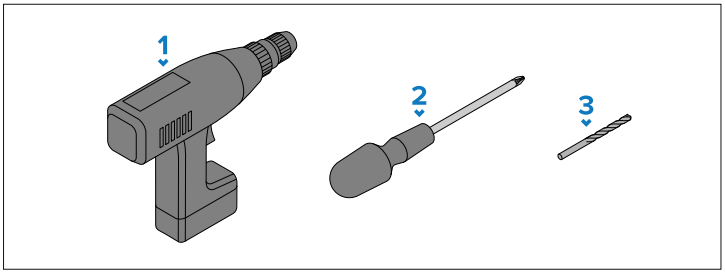

1. Power drill.
2. Screwdriver — appropriate for your fixings.
3. Drill bit — suitable for the material of the mounting surface and the following trunnion bracket mounting hole diameters:
   - **Axiom 7" display:** 4.2 mm (0.17 in).
   - **Axiom 9" / 12" display:** 5.75 mm (0.23 in).

9.3 Trunnion bracket mounting

Your display can be trunnion mounted to a horizontal or overhead surface.

Ensure you have chosen a suitable mounting location for your display, which has sufficient head room to allow the display's angle to be adjusted or the display to be removed if necessary. If installing 'above head' take extra care to ensure the knobs are tightened sufficiently to prevent them coming undone due to vibration when underway.

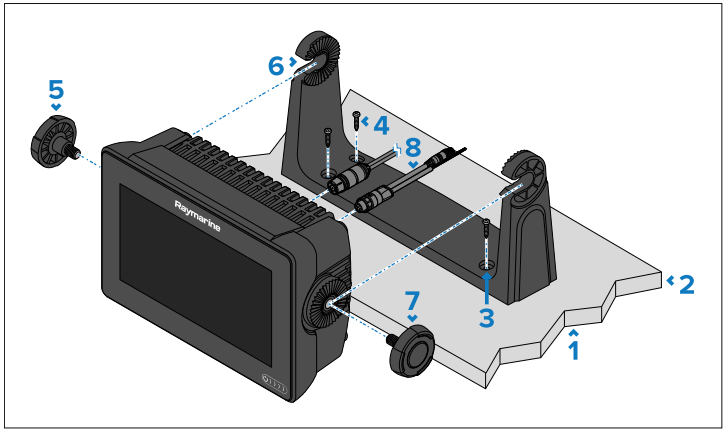

Note:
The above illustration depicts an Axiom 7" being mounted on a plastic trunnion bracket. The trunnion bracket supplied with the Axiom 9" and Axiom 12" are made from metal, and so will look different from the example shown. A metal trunnion bracket is also available for the Axiom 7" as an accessory — part number: R70524.

1. Check the underside of the mounting surface to ensure no damage will be caused by drilling.
2. Check the thickness of the mounting surface to ensure it is sufficient to support the display.
3. Using the trunnion bracket as a template, mark and drill each pilot hole on the mounting surface.
4. Secure the trunnion bracket to the mounting surface using your self tapping screws and an appropriate screwdriver.

   If the mounting surface is too thin for the self tapping screws, use stainless steel machine screws, washers and locking nuts to secure the trunnion bracket to the mounting surface. Alternatively, look to reinforce the rear of the mounting surface.
5. Insert the trunnion knobs into the sides of the display and partially tighten.
6. Slide the display into the trunnion bracket so that the trunnion knob threads are slotted into the recesses in the trunnion bracket.
7. Secure the display by fully tightening the trunnion knobs, ensuring that the ratchet teeth are correctly engaged.

   The knobs should be tightened by hand, sufficiently to prevent the display from moving whilst your vessel is underway.
8. Route and connect necessary cables.

CHAPTER 10: SURFACE MOUNTING

CHAPTER CONTENTS

- 10.1 Tools required (surface mount installations) (page 50)
- 10.2 Rear access requirements (page 50)
- 10.3 Preparing the mounting surface — surface mounting (page 50)
- 10.4 Surface mount installation methods (page 51)

10.1 Tools required (surface mount installations)

The following tools are recommended for surface mount installations:

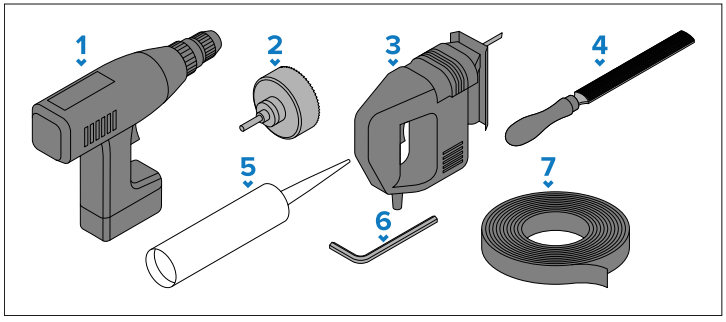

1. Power drill.
2. Hole cutter (appropriate size for corner diameters of the **Cut-out** line identified on the supplied mounting template):
   - 20.00 mm (0.79 in) — 7” and 12” displays.
   - 24.00 mm (0.94 in) — 9” displays.
3. Jigsaw.
4. Half-round file (or sandpaper).
5. Marine-grade sealant.
6. (1) 4 mm Hex wrench (Allen key).
7. Masking / self-adhesive tape.

Note:
(1) This item is only required for removing the trunnion adaptor when mounting an Axiom 7" display.

10.2 Rear access requirements

Access to the rear of the display and mounting surface is required to surface and flush mount the display.

Ensure there is sufficient access and space behind the mounting surface to attach and tighten the fixings and also to connect the cables.

10.3 Preparing the mounting surface — surface mounting

Surface mounting requires one cut-out hole. When the display is surface mounted, the glass / bezel will protrude from the mounting surface.

Note:
The following procedure is for preparing the mounting surface for surface mount installations. For flush mounting preparation instructions, refer to:

• **p.56 —** Preparing the mounting surface — flush mounting

Important:
Before preparing the mounting surface, ensure that:

• Your selected location meets the location requirements. For details, refer to:

– **p.38 —** Location requirements

• You have identified cable connections and the route that the cables will take.

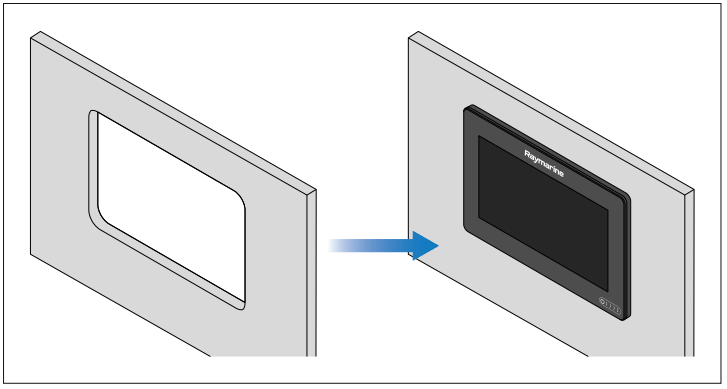

1. Mark the **cut-out** line on the mounting surface, as identified on the supplied mounting template.

2. Use a drill and an appropriate size drill bit or hole cutter to cut out the corners of the **Cut-out** line.

   The corner diameters for the displays are:

   - *20.00 mm (0.79 in) — 7” and 12” displays.*
   - *24.00 mm (0.94 in) — 9” displays.*

3. Use a jigsaw or similar cutting tool to cut out the remainder of the cut-out area.
4. Use a half-round file and / or sandpaper to smooth and rough edges or burs on the cut-out hole.

10.4 Surface mount installation methods

The surface mount installation methods that are available to you may vary depending on:

- The size of your display, AND:
- The parts that have been supplied with your product / purchased separately.

The following surface mount installation methods are available for **Axiom 7"** displays:

Method	Link
Trunnion adaptor:	**p.58 — Flush mounting using the trunnion adaptor (Axiom 7" only)**
Rear mounting kit:	**p.59 — Flush mounting using the rear mounting kit**

Note:
Before attempting to flush or surface mount an Axiom 7" display, the pre-fitted trunnion adaptor must first be removed from the rear of the unit. For more information, refer to:

- **p.51 — Removing the trunnion adaptor (Axiom 7" only)**

The following surface mount installation methods are available for **Axiom 9" / 12"** displays:

Method	Link
Rear mounting kit:	**p.59 — Flush mounting using the rear mounting kit**

Removing the trunnion adaptor (Axiom 7" only)

Before attempting to flush or surface mount an Axiom 7" display, the pre-fitted trunnion adaptor must first be removed from the rear of the unit.

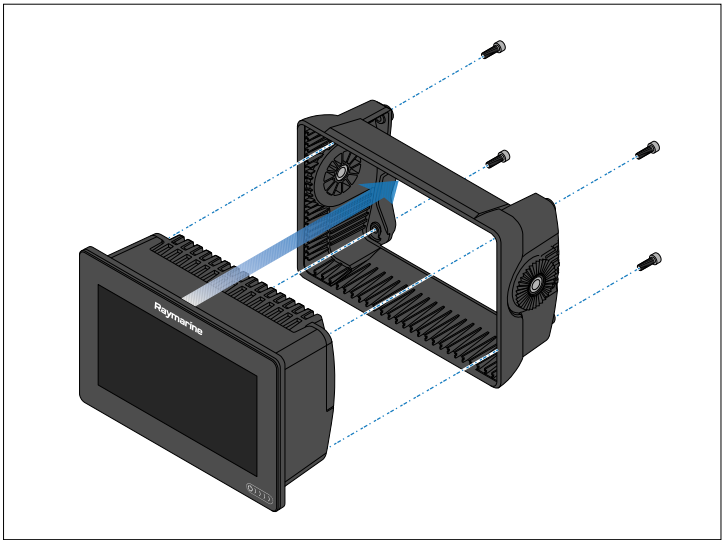

In order to remove the pre-fitted trunnion adaptor:

1. Unscrew and remove the 4x M5x16 screws using a 4 mm hex wrench (Allen key).
2. Pull the trunnion adaptor away from the rear of the display.

Surface mounting using the trunnion adaptor (Axiom 7" only)

Axiom 7" surface mounting instructions, using the pre-fitted trunnion adaptor (supplied with all Axiom 7" display variants).

Important:

• The supplied gasket provides a seal between the display and a suitably flat and rigid mounting surface or binnacle. **The gasket should be used in all installations.** It may also be necessary to use a marine-grade sealant if the mounting surface or binnacle is not entirely flat and / or has a rough surface finish.

• In above decks installations, marine-grade sealant should always be used to seal the gap between the edge of the mounting surface and the edge of the display.

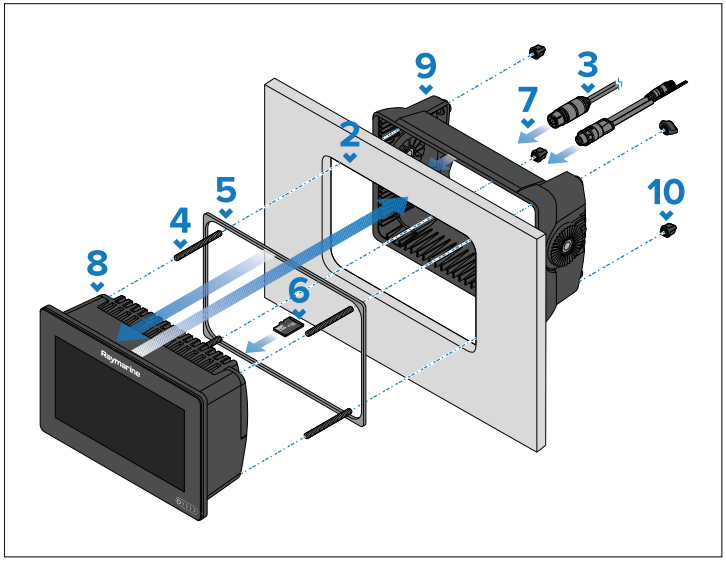

1. Ensure that the pre-fitted trunnion adaptor has been removed from the rear of the display in accordance with the instructions provided in the following section:
   - **p.51 —** Removing the trunnion adaptor (**Axiom 7"** only)
2. Ensure that the mounting surface has been prepared for surface mounting in accordance with the instructions provided in the following section:
   - **p.50 —** Preparing the mounting surface — surface mounting
3. Route the relevant cables to the area behind the mounting surface cut-out.

   This may be difficult or not possible once the display has been mounted.
4. Screw the 4 x supplied M5x58 threaded studs into the rear of the display.
5. Remove the backing from the supplied gasket and place the sticky side of the gasket onto the flange on the rear of the display. Press firmly onto the flange.
6. If required, insert your MicroSD card into the card reader which is located behind the rubber bung on the rear of the display.

   Once the display is mounted, the card reader slot may be difficult to access, or be completely inaccessible.
7. Connect the relevant cables to the rear of the display.
8. Slide the display into the cut-out area.
9. Place the trunnion adaptor over the rear of the display.
10. Secure the display in position by placing the 4x supplied M5 thumb nuts onto the threaded studs and then hand-tightening until secure.

Important:
To prevent potential damage to the unit, do NOT overtighten the thumb nuts. Hand tighten only.

Surface mounting using the rear mounting kit

The following steps provide instructions on how to surface mount your display using the rear mounting kit. The rear mounting kit is supplied with all Axiom 9" and Axiom 12" display variants and with some Axiom 7" display variants.

Note:
(Axiom 7" only) If your display variant did not include the rear mounting kit, one can be ordered separately; refer to the following section:

• **p.118 —** Spares and accessories

Important:

• The supplied gasket provides a seal between the display and a suitably flat and rigid mounting surface or binnacle. **The gasket should be used in all installations.** It may also be necessary to use a marine-grade sealant if the mounting surface or binnacle is not entirely flat and / or has a rough surface finish.

• In above decks installations, marine-grade sealant should always be used to seal the gap between the edge of the mounting surface and the edge of the display.

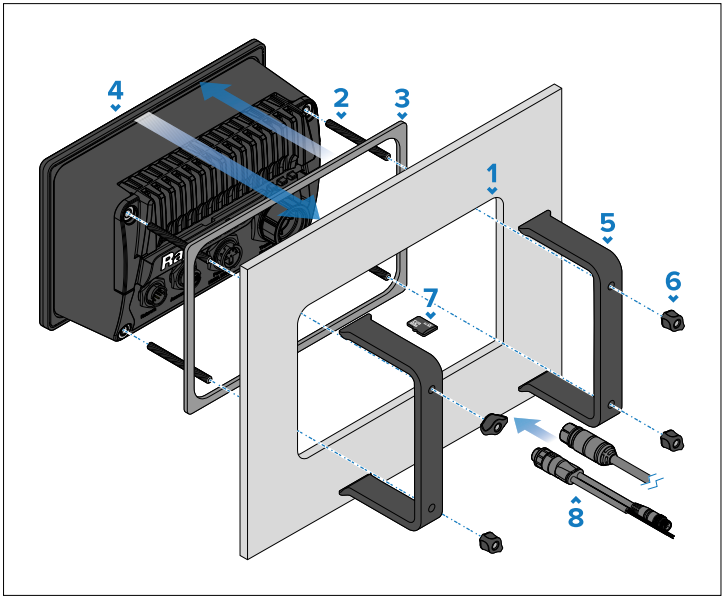

1. **(Axiom 7" only)** Ensure that the pre-fitted trunnion adaptor has been removed from the rear of the display in accordance with the instructions provided in the following section:
   - **p.51 —** Removing the trunnion adaptor (**Axiom 7"** only)
2. Ensure that the mounting surface has been prepared for surface mounting in accordance with the instructions provided in the following section:
   - **p.50 —** Preparing the mounting surface — surface mounting
3. Route the relevant cables to the area behind the mounting surface cut-out.

   This may be difficult or not possible once the display has been mounted.
4. Screw the 4 x supplied M5x58 threaded studs into the rear of the display.
5. Remove the backing from the supplied gasket and place the sticky side of the gasket onto the flange on the rear of the display. Press firmly onto the flange.
6. If required, insert your MicroSD card into the card reader which is located behind the rubber bung on the rear of the display.

Once the display is mounted, the card reader slot may be difficult to access, or be completely inaccessible.

7. Connect the relevant cables to the rear of the display.
8. Slide the display into the cut-out area.
9. Place the rear mounting brackets over the threaded studs.

   The appearance of the brackets which are supplied with your display may differ from that shown, due to the differences in size between each of the Axiom 7" 9" & 12" variants. However, the installation procedure will remain the same.

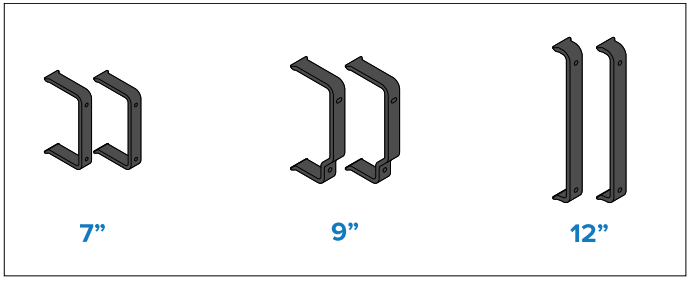

10. Secure the display in position by placing the 4x supplied M5 thumb nuts onto the threaded studs and then hand-tightening until secure.

Important:
To prevent potential damage to the unit, do NOT overtighten the thumb nuts. Hand tighten only.

CHAPTER 11: FLUSH MOUNTING

CHAPTER CONTENTS

- 11.1 Tools required (flush mount installations) (page 56)
- 11.2 Rear access requirements (page 56)
- 11.3 Preparing the mounting surface — flush mounting (page 56)
- 11.4 Flush mount installation methods (page 57)

11.1 Tools required (flush mount installations)

The following tools are recommended for flush mount installations:

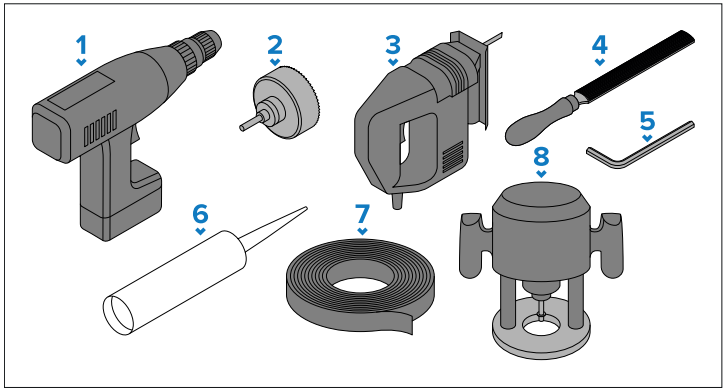

1. Power drill.
2. Hole cutter (appropriate size for corner diameters of the **Cut-out** line identified on the supplied mounting template):
   - 20.00 mm (0.79 in) — 7” and 12” displays.
   - 24.00 mm (0.94 in) — 9” displays.
3. Jigsaw.
4. Half-round file (or sandpaper).
5. (1) 4 mm Hex wrench (Allen key).
6. Marine-grade sealant.
7. Masking / self adhesive tape.
8. Hand router with a router bit of an appropriate size for the 13.00 mm (0.51 in) corner diameter required for the flush mount rebate.

Note:
(1) This item is only required to remove the trunnion adaptor when mounting an Axiom 7" display.

11.2 Rear access requirements

Access to the rear of the display and mounting surface is required to surface and flush mount the display.

Ensure there is sufficient access and space behind the mounting surface to attach and tighten the fixings and also to connect the cables.

11.3 Preparing the mounting surface — flush mounting

Flush mounting requires the same cut-out hole as surface mounting, and an additional rebate around the edge of the cut-out. When the display is flush mounted, the glass / bezel will be flush with the mounting surface.

Note:
The following procedure is for preparing the mounting surface for flush mount installations. For surface mounting preparation instructions, refer to:

- **p.56 — Preparing the mounting surface — surface mounting**

Important:
Before preparing the mounting surface, ensure that:

- Your selected location meets the location requirements. For details, refer to:
  - **p.38 — Location requirements**
- You have identified cable connections and the route that the cables will take.

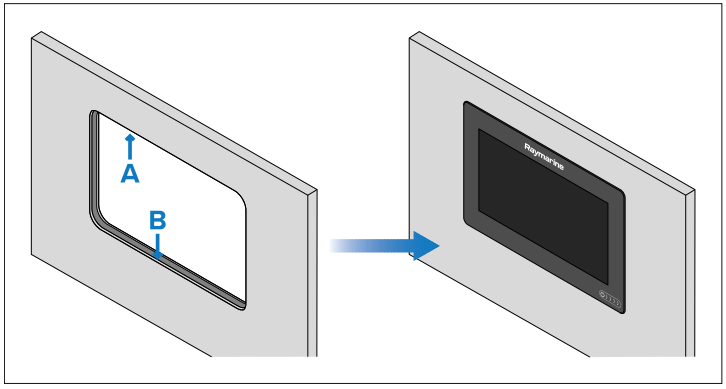

- **A** — Cut-out (when flush mounting, the cut-out will be the same size as for surface mounting.
- **B** — Flush mounting requires an extra rebate to fully recess the display in the mounting surface.

1. Mark the **cut-out** line on the mounting surface, as identified on the supplied mounting template.
2. Mark on the mounting surface the **Flush mount rebate** line, as identified on the supplied mounting template.
3. Use a drill and an appropriate size drill bit or hole-cutter to cut out the corners of the **Cut-out** line.

   The corner diameter for each display is:

   - *20.00 mm (0.79 in) — 7" and 12" displays.*
   - *24.00 mm (0.94 in) — 9" displays.*
4. Use a jigsaw or similar cutting tool to cut out the remainder of the **Cut-out** area.
5. Use a router hand tool to recess the marked **Flush mount rebate** area, to a depth of 8.00 mm (0.31 in).
6. Carefully (and temporarily) fit the display to the cut-out area, to check for a good fit. **Do not use any fixings at this time.** If the fit is very tight, it may be necessary to remove the display and file the edges of the cut-out to achieve a better fit, using a half-round file and / or sandpaper. Alternatively, if the fit is loose and there is a visible gap between the edge of the display and the cut-out, this will need to be filled with marine-grade sealant or suitable packing material to fill the gap. *This should only be done once the display has been secured to the surface using the fixings, as described in the next mounting procedure.*

11.4 Flush mount installation methods

The flush mount installation methods that are available to you may vary depending on:

- The size of your display, AND:
- The parts that have been supplied with your product / purchased separately.

The following flush mount installation methods are available for **Axiom 7"** displays:

Method	Link
Trunnion adaptor:	**p.58 — Flush mounting using the trunnion adaptor (Axiom 7" only)**
Rear mounting kit:	**p.59 — Flush mounting using the rear mounting kit**

Note:
Before attempting to flush or surface mount an Axiom 7" display, the pre-fitted trunnion adaptor must first be removed from the rear of the unit. For more information, refer to:

- **p.58 — Removing the trunnion adaptor (Axiom 7" only)**

The following flush mount installation methods are available for **Axiom 9" / 12"** displays:

Method	Link
Rear mounting kit:	**p.59 — Flush mounting using the rear mounting kit**

Removing the trunnion adaptor (Axiom 7" only)

Before attempting to flush or surface mount an Axiom 7" display, the pre-fitted trunnion adaptor must first be removed from the rear of the unit.

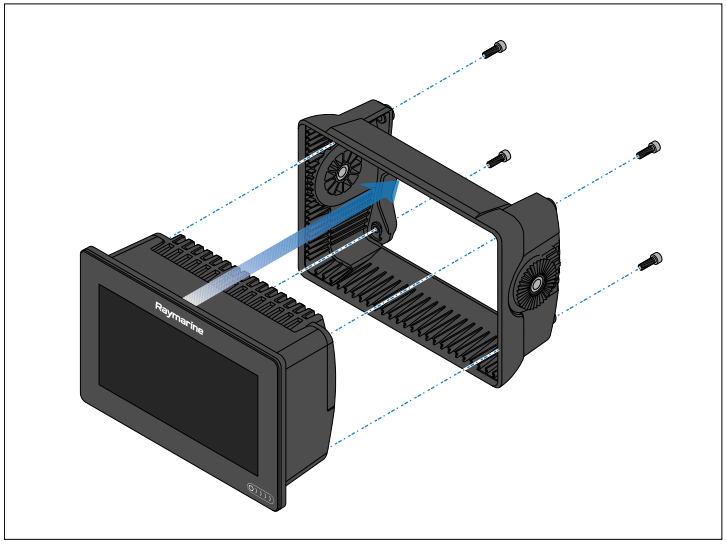

In order to remove the pre-fitted trunnion adaptor:

1. Unscrew and remove the 4x M5x16 screws using a 4 mm hex wrench (Allen key).
2. Pull the trunnion adaptor away from the rear of the display.

Flush mounting using the trunnion adaptor (Axiom 7" only)

Axiom 7" flush mounting instructions, using the pre-fitted trunnion adaptor (supplied with all Axiom 7" display variants).

Important:

- The supplied gasket provides a seal between the display and a suitably flat and rigid mounting surface or binnacle. **The gasket should be used in all installations.** It may also be necessary to use a marine-grade sealant if the mounting surface or binnacle is not entirely flat and / or has a rough surface finish.
- In above decks installations, marine-grade sealant should always be used to seal the gap between the edge of the mounting surface and the edge of the display.

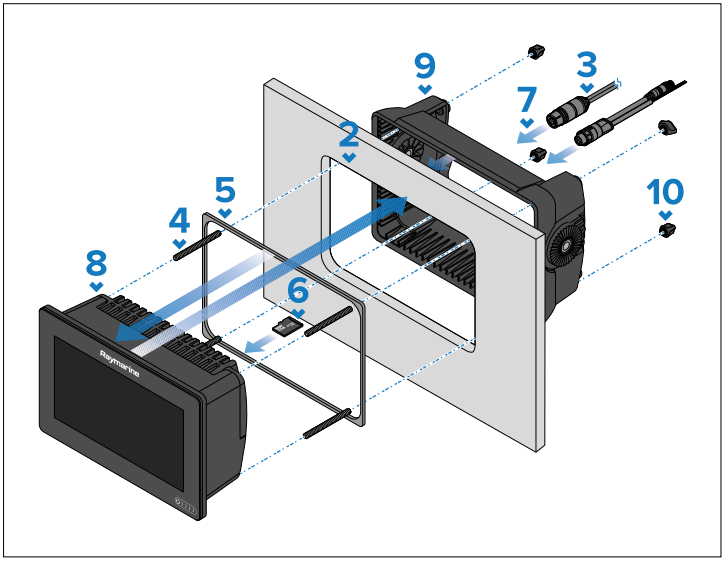

1. Ensure that the pre-fitted trunnion adaptor has been removed from the rear of the display in accordance with the instructions provided in the following section:
   - **p.58 — Removing the trunnion adaptor (Axiom 7" only)**

2. Ensure that the mounting surface has been prepared for flush mounting in accordance with the instructions provided in the following section:

   - **p.56 — Preparing the mounting surface — flush mounting**

3. Route the relevant cables to the area behind the mounting surface cut-out.

   This may be difficult or not possible once the display has been mounted.

4. Screw the 4 x supplied M5x58 threaded studs into the rear of the display.
5. Remove the backing from the supplied gasket and place the sticky side of the gasket onto the flange on the rear of the display. Press firmly onto the flange.
6. If required, insert your MicroSD card into the card reader which is located behind the rubber bung on the rear of the display.
7. Connect the relevant cables to the rear of the display.
8. Slide the display into the cut-out area.
9. Place the trunnion adaptor over the rear of the display.
10. Secure the display in position by placing the 4x supplied M5 thumb nuts onto the threaded studs and then hand-tightening until secure.

Important:
To prevent potential damage to the unit, do NOT overtighten the thumb nuts. Hand tighten only.

Flush mounting using the rear mounting kit

Installation steps for flush mounting the display using the rear mounting kit (supplied with select Axiom 7" display variants and all Axiom 9" / 12" display variants).

Note:
(Axiom 7" only) If you wish to flush mount your Axiom 7" display using the rear mounting kit and the required parts are NOT supplied with your product, refer to the following section:

- **p.118 — Spares and accessories**

Important:

- The supplied gasket provides a seal between the display and a suitably flat and rigid mounting surface or binnacle. **The gasket should be used in all installations.** It may also be necessary to use a marine-grade sealant if the mounting surface or binnacle is not entirely flat and / or has a rough surface finish.

- In above decks installations, marine-grade sealant should always be used to seal the gap between the edge of the mounting surface and the edge of the display.

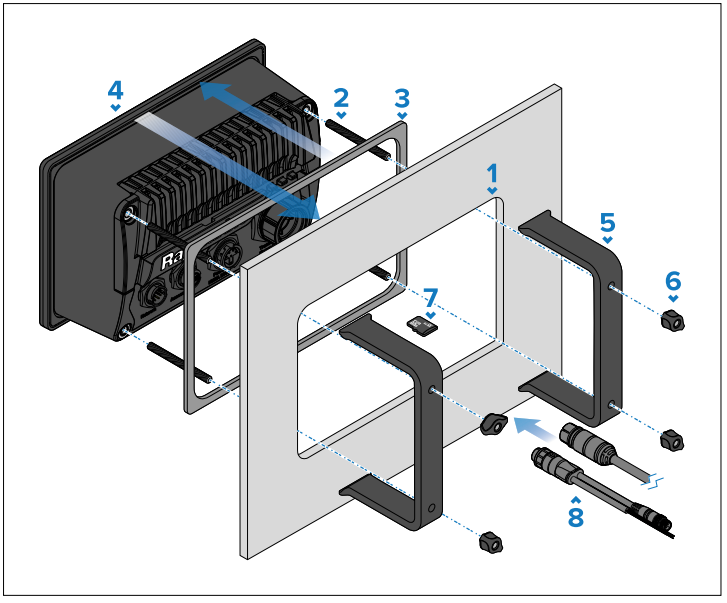

1. **(Axiom 7" only)** Ensure that the pre-fitted trunnion adaptor has been removed from the rear of the display in accordance with the instructions provided in the following section:

   - **p.58 — Removing the trunnion adaptor (Axiom 7" only)**

2. Ensure that the mounting surface has been prepared for flush mounting in accordance with the instructions provided in the following section:

   - **p.56 — Preparing the mounting surface — flush mounting**

3. Route the relevant cables to the area behind the mounting surface cut-out.

   This may be difficult or not possible once the display has been mounted.

4. Screw the 4 x supplied M5x58 threaded studs into the rear of the display.
5. Remove the backing from the supplied gasket and place the sticky side of the gasket onto the flange on the rear of the display. Press firmly onto the flange.
6. If required, insert your MicroSD card into the card reader which is located behind the rubber bung on the rear of the display.
7. Connect the relevant cables to the rear of the display.
8. Slide the display into the cut-out area.
9. Place the rear mounting brackets over the threaded studs.

   The appearance of the brackets which are supplied with your display may differ from that shown, due to the differences in size between each of the Axiom 7" 9" & 12" variants. However, the installation procedure will remain the same.

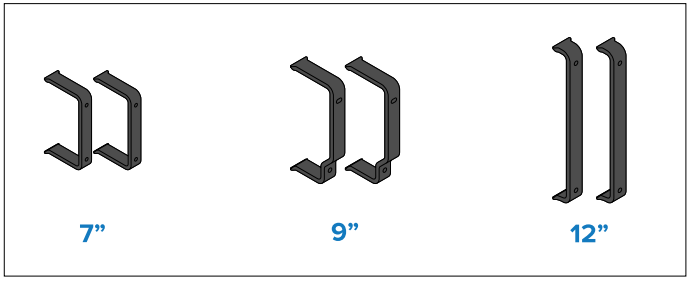

10. Secure the display in position by placing the 4x supplied M5 thumb nuts onto the threaded studs and then hand-tightening until secure.

Important:
To prevent potential damage to the unit, do NOT overtighten the thumb nuts. Hand tighten only.

CHAPTER 12: CABLES AND CONNECTIONS — GENERAL INFORMATION

CHAPTER CONTENTS

- 12.1 General cabling guidance (page 62)
- 12.2 Connections overview (page 64)

12.1 General cabling guidance

Cable types and length

It is important to use cables of the appropriate type and length.

- Unless otherwise stated only use cables supplied by Raymarine.
- Where it is necessary to use non-Raymarine cables, ensure that they are of correct quality and gauge for their intended purpose. (e.g.: longer power cable runs may require larger wire gauges to minimize voltage drop along the run).

Cable routing and bend radius

To maximize cable performance and lifespan, it's important to ensure that all cables are routed correctly and adequate space is provided to allow for each cable's minimum bend radius.

Minimum cable bend radius

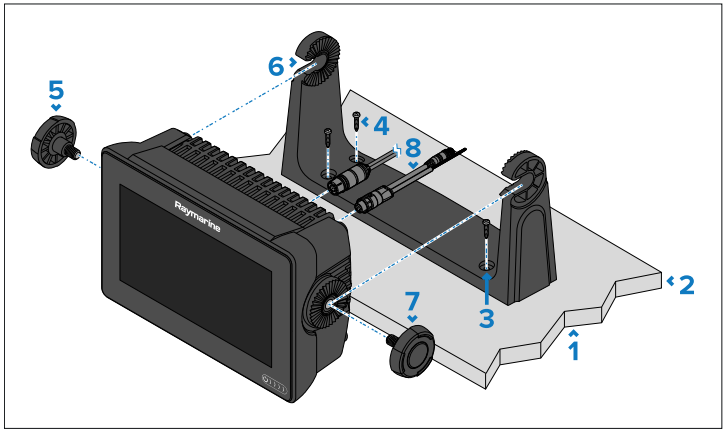

Do NOT bend cables excessively. Wherever possible, ensure that your chosen product installation location allows enough clearance for the minimum cable bend diameter specified in the following table:

	Description	Value
Ø	Cable minimum bend **diameter**.	200 mm (7.87 in.)
R	Cable minimum bend **radius**.	100 mm (3.94 in.)

Note:
For products where multiple different cable types are connected, each with a different minimum cable bend radius, the higher figure is provided in the table above (i.e. the cable with the greatest minimum bend radius is specified).

Cable routing — best practices

- Protect all cables from physical damage and exposure to heat. Use trunking or conduit where possible. Do NOT run cables through bilges or doorways, or close to moving or hot objects.
- Secure cables in place using cable clips or cable ties. Coil any excess cable and tie it out of the way.
- Where a cable passes through an exposed bulkhead or deckhead, use a suitable watertight feed-through (conduit).
- Do NOT run cables near to engines or fluorescent lights.
- Always route data cables as far away as possible from:
  - Other equipment and cables.
  - High current-carrying AC and DC power lines.
  - Antennas.

Strain relief

Use adequate strain relief for cabling to ensure that connectors are protected from strain and will not pull out under extreme sea conditions.

Circuit isolation

Appropriate circuit isolation is required for installations using both AC and DC current:

- Always use isolating transformers or a separate power-inverter to run PCs, processors, displays and other sensitive electronic instruments or devices.
- If using Weather FAX audio cables, always use an isolating transformer.
- If using a third-party audio amplifier, always use an isolated power supply.

- If using an RS232/NMEA converter, always ensure optical isolation on the signal lines.
- Always ensure that PCs or other sensitive electronic devices have a dedicated power circuit.

Cable shielding

Ensure that cable shielding is not damaged during installation and that all cables are properly shielded.

Important:
Be aware that some **third-party** cables and adapters (for example, certain Ethernet cables using RJ45 connectors) are not always shielded. To prevent breaks in cable shielding continuity and potential grounding issues, special attention is required to ensure that any cables, extension cables, adapters, or other signal-coupling devices used in cable runs **maintain all shield connections throughout the cable run**.

Caution: Transducer cable

• Do NOT use the transducer cable to lift or suspend the transducer; always support the transducer body directly during installation.

• Do NOT cut, shorten, or splice the transducer cable.

• Do NOT remove the connector.

If the cable is cut, it cannot be repaired. Cutting the cable will also void the warranty.

Connecting cables

Follow the steps below to connect the cable(s) to your product.

1. Ensure that the vessel's power supply is switched off.
2. Ensure that the device being connected has been installed in accordance with the installation instructions supplied with that device.
3. Ensuring correct orientation, push cable connectors fully onto the corresponding connectors.
4. Engage any locking mechanism to ensure a secure connection (e.g.: turn locking collars clockwise until tight, or in the locked position).
5. Ensure any bare ended wire connections are suitably insulated to prevent shorting and corrosion due to water ingress.

Bare-ended wires

You must ensure that any bare-ended wires are adequately protected from short circuit and water ingress.

Connections

It is recommended that bare-ended wire connections are made by soldering or using crimp connectors, and then protected by wrapping the connection in electrical insulation tape.

Unused wires

Any unused bare-ended wires should be folded back and wrapped in electrical insulation tape.

12.2 Connections overview

Explanation of the display's physical connections.



MFD / chartplotter connections

The following connections are available on your display.

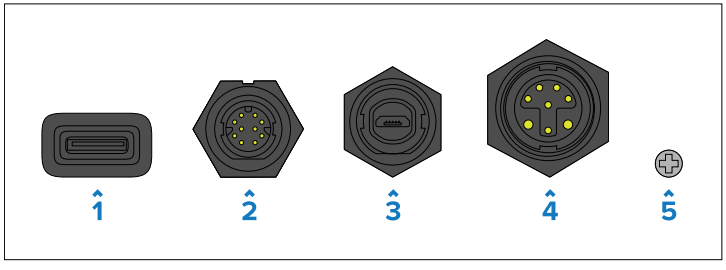

1. **MicroSD card reader** — Connects to a MicroSDXC memory card.
2. **Network** — Connects to a RayNet network or device. For more information, refer to: **p.81 — Network connection**
3. **Accessory** — Connects to an external card reader, such as the RCR-SD/USB (part number A80440). For more information, refer to: **p.85 — Accessory connection**
4. **Power / NMEA 2000** — Connects to a 12 V dc power supply and an NMEA 2000 (or SeaTalk NG™) backbone. For more information, refer to:
   - **p.66 — Power connection**
   - **p.80 — NMEA 2000 / SeaTalk NG connection**
5. **Optional grounding point** — The optional grounding point should **only** be used when the display experiences touchscreen or power swipe interference from nearby equipment. For more information, refer to: **p.69 — Grounding — optional dedicated drain wire**

Transducer connections

The range of transducer connections that are available will vary depending on your display variant.

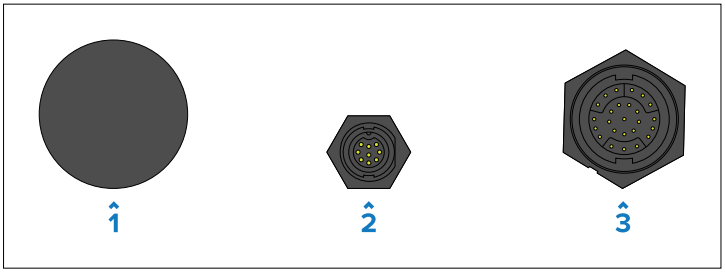

1. **No connection (Axiom Chartplotter only display variants)** — The display must be connected to a separate sonar module in order for sonar features to be enabled.
2. **DownVision (Axiom DV display variants)** — Connects directly to DownVision / CPT-Series transducers and to other compatible transducers via the use of an adaptor cable. For more information, refer to: **p.75 — Transducer connections — Axiom DV**
3. **RealVision (Axiom RV 3D display variants)** — Connects directly to RealVision transducers and to other compatible transducers via the use of an adaptor cable. For more information, refer to: **p.71 — Transducer connections — Axiom RV 3D**

CHAPTER 13: POWER CONNECTIONS

CHAPTER CONTENTS

- 13.1 Power connection (page 66)

13.1 Power connection

The power cable must be connected to a 12 V dc power supply, this can be achieved by connecting directly to a battery, or via the distribution panel. For 24 V vessels a suitable voltage converter is required. The product is protected against reverse polarity.

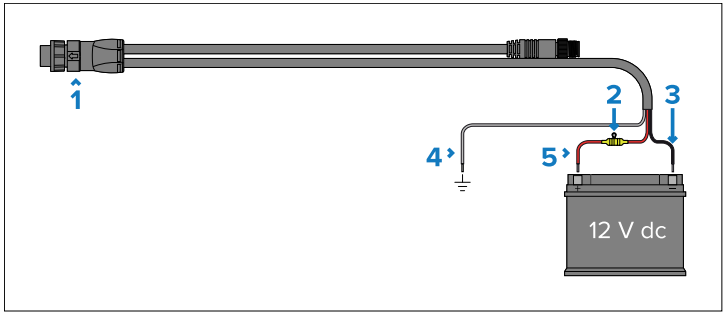

	Description
1	Power / NMEA 2000 cable — connects to the rear of the display.
2	Waterproof fuse holder containing a suitably-rated inline fuse (**not supplied**), which must be fitted to the red positive wire — for fuse ratings, refer to: • **p.66 — Inline fuse and thermal breaker ratings**
3	Black wire (negative) — connects to the power supply's negative terminal.
4	Gray wire (ground) — connects to the vessel's RF ground point (if available), or the negative battery terminal.
5	Red wire (positive) — connects to the power supply's positive terminal.

Inline fuse and thermal breaker ratings

The following inline fuse and thermal breaker ratings apply to your product:

Inline fuse rating	Thermal breaker rating
7A	7A

Important:
The suitable fuse rating for the thermal breaker is dependent on the number of devices you are connecting. If in doubt, consult an authorized Raymarine dealer.

Caution: Power supply protection

When installing this product, ensure that the power source is adequately protected by means of a suitably-rated fuse or thermal circuit breaker.

Power distribution

Recommendations and best practice for the power connection of products supplied with a drain wire as part of the supplied power cable.

- The product is supplied with a power cable, either as a separate item or a captive cable permanently attached to the product. Only use the power cable supplied with the product. Do NOT use a power cable designed for, or supplied with, a different product.
- Refer to the *Power connection* section for more information on how to identify the wires in your product's power cable, and where to connect them.
- See below for more information on implementation for some common power distribution scenarios:

Important:

• When planning and wiring, take into consideration other products in your system, some of which (e.g. sonar modules) may place large power demand peaks on the vessel's electrical system, which may impact the voltage available to other products during the peaks.

• The information provided below is for guidance only, to help protect your product. It covers common vessel power arrangements, but does NOT cover every scenario. If you are unsure how to provide the correct level of protection, please consult an authorized dealer or a suitably qualified professional marine electrician.

Implementation — connection to distribution panel (Recommended)

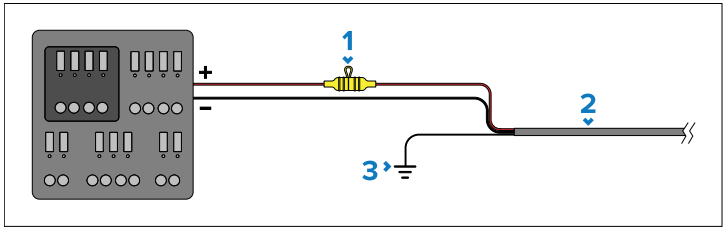

	Description
1	Waterproof fuse holder containing a suitably-rated inline fuse must be fitted. For suitable fuse rating, refer to: *Inline fuse and thermal breaker ratings*.
2	Product power cable.
3	Drain wire connection point.

- It is recommended that the supplied power cable is connected to a suitable breaker or switch on the vessel's distribution panel or factory-fitted power distribution point.
- The distribution point should be fed from the vessel's primary power source by 8 AWG (8.36 mm²) cable.
- Ideally, all equipment should be wired to individual suitably-rated thermal breakers or fuses, with appropriate circuit protection. Where this is not possible and more than 1 item of equipment shares a breaker, use individual inline fuses for each power circuit to provide the necessary protection.
- The power cable supplied with your product includes a drain wire, which must be connected to the vessel's common RF ground.

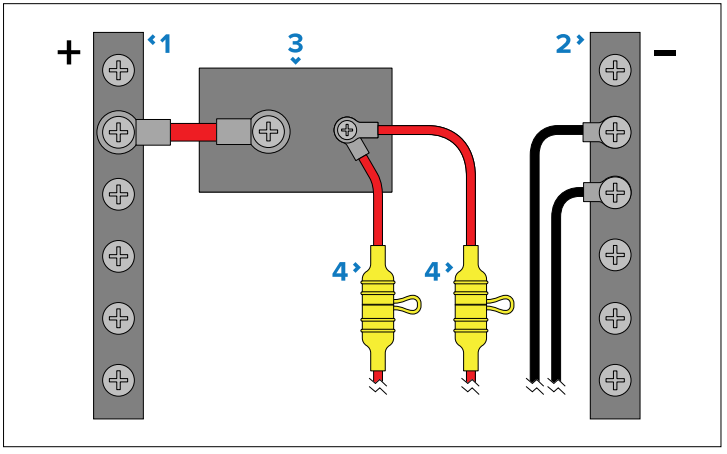

	Description
1	Positive (+) bar
2	Negative (-) bar
3	Circuit breaker
4	Waterproof fuse holder containing a suitably-rated inline fuse must be fitted. For suitable fuse rating, refer to: *Inline fuse and thermal breaker ratings*.

Important:
Observe the recommended fuse / breaker ratings provided in the product's documentation, however be aware that the suitable fuse / breaker rating is dependent on the number of devices being connected.

Implementation — direct connection to battery

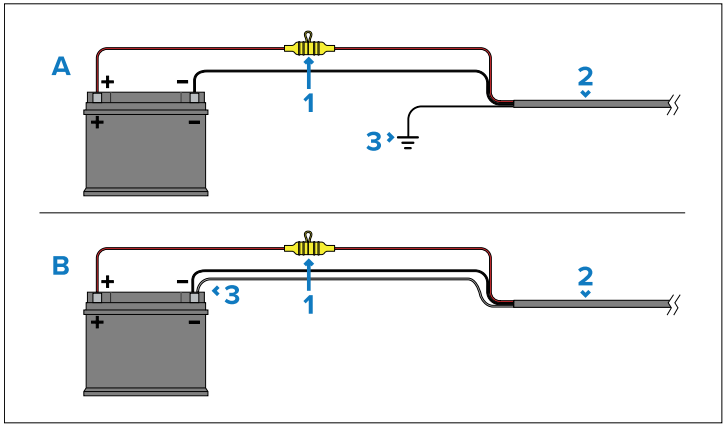

- Where connection to a power distribution panel is not possible, the power cable supplied with your product may be connected directly to the vessel's battery, via a suitably rated fuse or breaker.
- If the power cable is NOT supplied with a fitted inline fuse, you MUST fit a suitably rated fuse or breaker between the red wire and the battery's positive terminal.
- Refer to the inline fuse ratings provided in the product's documentation.
- If you need to extend the length of the power cable supplied with your product, ensure you observe the dedicated *Power cable extensions* advice provided in the product's documentation.

	Description
1	Waterproof fuse holder containing a suitably-rated inline fuse must be fitted. For suitable fuse rating, refer to: *Inline fuse and thermal breaker ratings*.
2	Product power cable.
3	Drain wire connection point.

Battery connection scenario A:
Suitable for a vessel with a common RF ground point. In this scenario, the power cable's drain wire should be connected to the vessel's common ground point.
Battery connection scenario B:
Suitable for a vessel without a common grounding point. In this case, the power cable's drain wire should be connected directly to the battery's negative terminal.

Grounding

Ensure that you observe any additional grounding advice provided in the product's documentation.

More information

It is recommended that best practice is observed in all vessel electrical installations, as detailed in the following standards:

- BMEA Code of Practice for Electrical and Electronic Installations in Boats
- NMEA 0400 Installation Standard
- ISO 13297: Small craft — Electrical systems — Alternating and direct current installations
- ISO 10133: Small craft — Electrical systems — Extra-low-voltage d.c. installations
- ABYC E-11 AC & DC Electrical Systems on Boats
- ABYC A-31 Battery chargers and Inverters
- ABYC TE-4 Lightning Protection

Warning: Product grounding

Before applying power to this product, it MUST be correctly grounded, in accordance with the instructions provided.

Power cable extension (12 / 24 V systems)

If you need to extend the length of the power cable supplied with your product, ensure you observe the following advice:

- The power cable for each unit in your system should be run as a separate, single length of 2-wire cable from the unit to the vessel's battery or distribution panel.
- Ensure that the extension cable is of a sufficient gauge for the supply voltage, the total current load of the device, and the length

of the cable run — as the cable run length increases, the greater the voltage drop will be from one end of the power cable to the other.

- Refer to the following table for typical **minimum** power cable wire gauges:

Cable length in meters (feet)	Wire gauge in AWG (mm^2) for 12 V supply	Wire gauge in AWG (mm^2) for 24 V supply
<8 (<25)	16 (1.31 mm^2)	18 (0.82 mm^2)
16 (50)	14 (2.08 mm^2)	16 (1.31 mm^2)
24 (75)	12 (3.31 mm^2)	14 (2.08 mm^2)
>32 (>100)	10 (5.26 mm^2)	12 (3.31 mm^2)

Important:
Be aware that some products in your system (such as sonar modules) can create voltage peaks at certain times, which may impact the voltage available to other products during the peaks.

Important:
To ensure power cables (including any extension) are of a sufficient gauge, ensure that there is a continuous **minimum** voltage of **10.8 V dc** at the end of the cable where it enters the product's power connector, even with a fully flat battery at 11 V dc. (Do not assume that a flat battery is at 0 V dc. Due to the discharge profile and internal chemistry of batteries, the current drops much faster than the voltage. A "fully flat" battery still shows a positive voltage, even if it doesn't have enough current to power your device.)

Warning: Positive ground systems

Do NOT connect this unit to a system which has positive grounding.

Grounding — optional dedicated drain wire

Frequencies emitted from equipment such as switched mode power supplies or MF/HF transmitters can cause interference with your displays's touchscreen or power swipe. If you experience issues with touchscreen performance or the power swipe, fitting an additional dedicated drain wire can resolve the issue.

Important:
The additional wire is required in addition to the drain wire (shield) that is part of the product's power cable, but should ONLY be used when touchscreen or power swipe interference is observed.

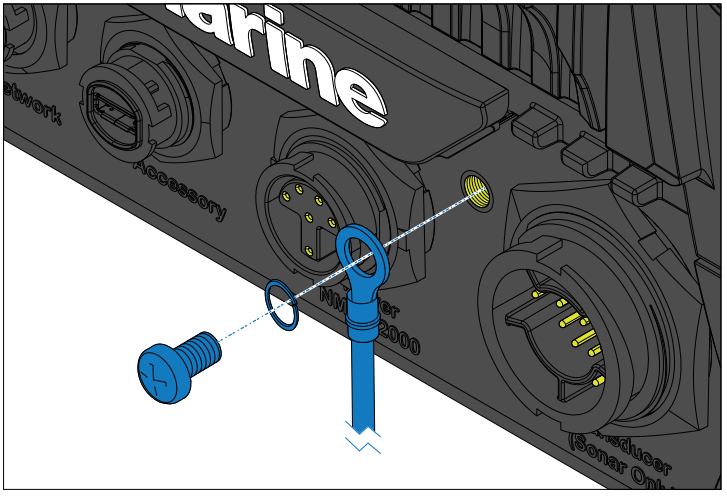

Connect one end of the additional drain wire (not supplied) to your product using the supplied crimp, washer and screw.

Connect the other end of the additional drain wire to the same point as the power cable drain wire (shield). This will be either the vessel's RF ground point, or on vessels without an RF ground system, the negative battery terminal.

The dc power system should be either:

- Negative grounded, with the negative battery terminal connected to the vessel's ground; or
- Floating, with neither battery terminal connected to the vessel's ground.

If several items require grounding, they may first be connected to a single local point (e.g. within a switch panel), with this point connected via a single, appropriately-rated conductor, to the vessel's common RF ground point.

Implementation

The preferred minimum requirement for the path to ground is via a flat tinned copper braid, with a 30 A rating (1/4 inch) or greater. If this is not possible, an equivalent stranded wire conductor may be used, rated as follows:

- for runs of <1 m (3 ft), use 6 mm^2 (#10 AWG) or greater.
- for runs of >1 m (3 ft), use 8 mm^2 (#8 AWG) or greater.

In any grounding system, always keep the length of connecting braid or wires as short as possible.

References

- ISO10133/13297
- BMEA code of practice
- NMEA 0400

CHAPTER 14: TRANSDUCER CONNECTIONS — AXIOM RV 3D

CHAPTER CONTENTS

- 14.1 RealVision transducer connection (page 72)
- 14.2 DownVision and CPT-S-Series transducer connection (page 73)
- 14.3 Traditional transducer connection (page 73)
- 14.4 Axiom RV 3D variant — Transducer adaptor cables (page 73)

14.1 RealVision transducer connection

RealVision 3D transducers can be connected directly to an Axiom RV 3D display's **Transducer (Sonar Only)** connection using the cable(s) supplied with the transducers.

Example — RealVision 3D split pair transducer connections

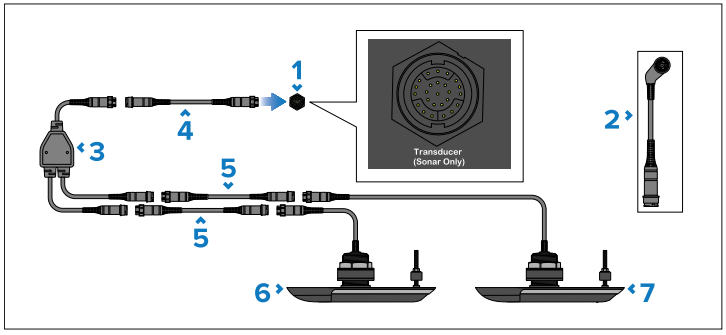

1. Display's **Transducer (Sonar Only)** 25-pin connector.
2. Optional right angled adaptor (part number: A80515) supplied separately (used to reduce the space required behind display).
3. 'Y' cable (supplied with split pair transducer packs)
4. 8 m (26.2 ft) extension cable (supplied with split pair transducer packs)
5. Optional extension cables can be fitted between the transducer and 'Y' cable if required, or between supplied extension cable and display.
6. Transducer, e.g.: RV-412P.
7. Transducer, e.g.: RV-412S.

For a list of compatible transducers refer to:

- **p.23 — Compatible transducers**

Warning: Transducer cables

Do NOT remove the transducer cable whilst the product is powered on; doing so could cause sparks. If the transducer cable is accidently removed whilst the product is powered on, switch the product's power off, replace the cable, and then switch the power back on.

Caution: Do not cut transducer cables

- Cutting the transducer cable severely reduces sonar performance. If the cable is cut, it must be replaced, it cannot be repaired.
- Cutting the transducer cable will void the warranty and invalidate the European CE mark.

RealVision transducer extension cables

Transducers are supplied with a fitted cable, for some installations (including all split-pair transducer installations) it may be necessary to extend the length of the transducer cable.

Note:

- For best performance, cable runs should be kept to a minimum.
- Only use Raymarine transducer extension cables.

RealVision offers the following optional extension cables are available:

- **RealVision** transducer extension cable 3 m (9.8 ft) (part number A80475)
- **RealVision** transducer extension cable 5 m (16.4 ft) (part number A80476)
- **RealVision** transducer extension cable 8 m (26.2 ft) (part number A80477)

Split pair transducers: Extension cables fitted between the transducer and the 'Y' cable must be fitted in equal length pairs (i.e.: each transducer's final cable length must be the same).

14.2 DownVision and CPT-S-Series transducer connection

DownVision and CPT-S-Series transducers can be connected to an Axiom RV 3D display's **Transducer (Sonar Only)** connection using the RV 25-pin to DV 9-pin adaptor cable (part number: A80490).

Example DownVision transducer connection

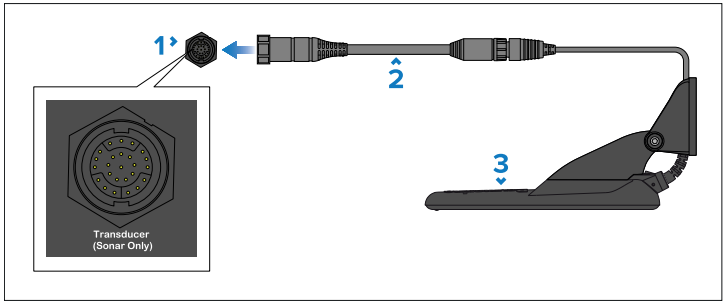

1. Display's **Transducer (Sonar Only)** 25-pin connector.
2. RV 25-pin to DV 9-pin adaptor cable (part number: A80490).
3. Transducer (DownVision transducer illustrated).

For a list of compatible transducers refer to:

- **p.23 — Compatible transducers**

DownVision transducer extension cable

For best performance, cable runs should be kept to a minimum. However, for some installations it may be necessary to extend the transducer cable.

- A 4 m (13.1 ft) Transducer extension cable (Part number: A80273) is available.
- It is recommended that only one cable extension is used.

14.3 Traditional transducer connection

Traditional transducers can be connected to an Axiom RV 3D display's **Transducer (Sonar Only)** connection using the RV 25-pin to CP370 8-pin adaptor cable (part number: A80489).

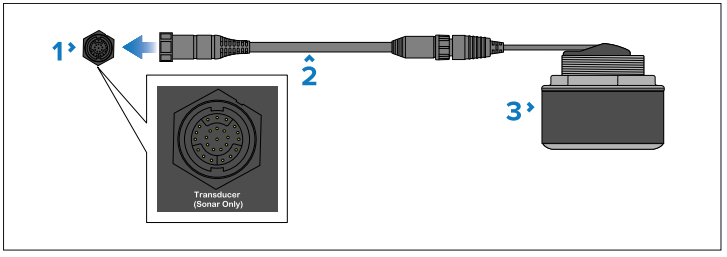

1. Display's **Transducer (Sonar Only)** 25–pin connector.
2. RV 25-pin to CP370 8-pin adaptor cable (part number: A80489).
3. Traditional transducer.

For a list of compatible transducers refer to:

- **p.23 — Compatible transducers**

14.4 Axiom RV 3D variant — Transducer adaptor cables

The following adaptor cables enable an Axiom RV 3D display to be connected to a wider selection of transducers.

Part	Description
A80488	25-pin RV to 7-pin embedded transducer adaptor cable.
A80489	25-pin RV to 8-pin CP370 transducer adaptor cable.
A80490	25-pin RV to 9-pin DV transducer adaptor cable.
A80491	25-pin RV to 25-pin RV & 7-pin embedded transducers Y-cable.
A80492	25-pin RV to 25-pin RV & 8-pin CP370 transducers Y-cable.

Part	Description
A80493	25-pin RV to 7-pin embedded & 9-pin DV transducers Y-cable.
A80494	25-pin RV to 8-pin CP370 & 9-pin DV transducers Y-cable.

CHAPTER 15: TRANSDUCER CONNECTIONS — AXIOM DV

CHAPTER CONTENTS

- 15.1 DownVision and CPT-S-Series transducer connections (page 76)
- 15.2 Traditional transducer connection (page 76)
- 15.3 Axiom DV variant — Transducer adaptor cables (page 76)

15.1 DownVision and CPT-S-Series transducer connections

DownVision and CPT-S-Series transducers can be connected directly to an Axiom DV display's **Transducer (Sonar Only)** connection using the cable(s) supplied with the transducers.

Example DownVision transducer connection

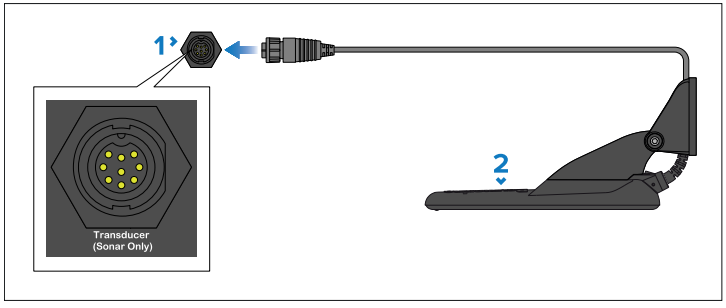

1. Display's **Transducer (Sonar Only)** 9-pin connector.
2. Transducer (DownVision transducer illustrated).

For a list of compatible transducers refer to:

- **p.23 — Compatible transducers**

Warning: Transducer cables

Do NOT remove the transducer cable whilst the product is powered on; doing so could cause sparks. If the transducer cable is accidently removed whilst the product is powered on, switch the product's power off, replace the cable, and then switch the power back on.

Caution: Do not cut transducer cables

• Cutting the transducer cable severely reduces sonar performance. If the cable is cut, it must be replaced, it cannot be repaired.

• Cutting the transducer cable will void the warranty and invalidate the European CE mark.

DownVision transducer extension cable

For best performance, cable runs should be kept to a minimum. However, for some installations it may be necessary to extend the transducer cable.

- A 4 m (13.1 ft) Transducer extension cable (Part number: A80273) is available.
- It is recommended that only one cable extension is used.

15.2 Traditional transducer connection

Traditional transducers can be connected to an Axiom DV display's **Transducer (Sonar Only)** connection using the DV 9-pin to CP370 8-pin adaptor cable (part number: A80485).

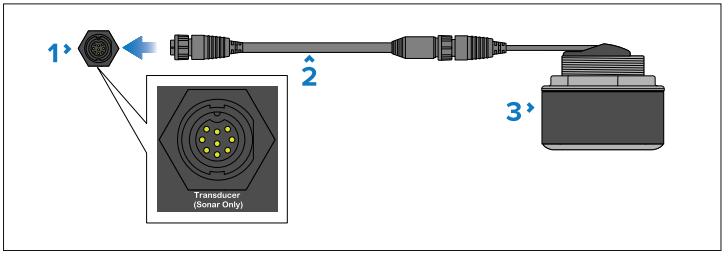

1. Display's **Transducer (Sonar Only)** 9-pin connector.
2. DV 9-pin to CP370 8-pin adaptor cable (part number: A80485).
3. Traditional transducer.

For a list of compatible transducers refer to:

- **p.23 — Compatible transducers**

15.3 Axiom DV variant — Transducer adaptor cables

The following adaptor cables enable an Axiom RV 3D display to be connected to a wider selection of transducers.

Part	Description
A80484	9-pin DV to 7-pin Embedded Transducer Adapter
A80485	9-pin DV to 8-pin CP370 Transducer Adapter

Part	Description
A80486	9-pin DV to 9-pin DV & 7-Pin Embedded Transducers Y-Cable
A80487	9-pin DV to 9-pin DV & 8-Pin CP370 Transducers Y-Cable

CHAPTER 16: NETWORK CONNECTIONS

CHAPTER CONTENTS

- 16.1 Networking constraints (page 79)
- 16.2 NMEA 2000 / SeaTalk NG connection (page 80)
- 16.3 NMEA 0183 connection (page 80)
- 16.4 Network connection (page 81)
- 16.5 Internet connection (page 82)

16.1 Networking constraints

In systems that include more than one chartplotter, the chartplotters must be networked together using an Ethernet network. The Ethernet network can be either a direct RayNet cable connection or connection via a network switch, such as the RNS-5. The following constraints apply when networking chartplotters:

Ethernet networks

- All networked chartplotters should have the same software version.
- Any network including more than one chartplotter must have a designated **datamaster**.
- In mixed Axiom-Series and Axiom 2-Series display networks, an Axiom 2-Series display must be the datamaster.
- Mixed systems containing chartplotters running LightHouse 4 and chartplotters running LightHouse 5 are NOT supported.
- The datamaster chartplotter is the primary display in the system that will receive data from NMEA 2000 / SeaTalk NG and, if applicable, NMEA 0183 devices. The data received by the datamaster will be bridged over the Ethernet network to other networked chartplotters.
- Networked chartplotters will share the datamaster's Homescreen. Changes made to the Homescreen on any chartplotter on the network will be reflected on all networked chartplotters.
- The data from other compatible Ethernet devices connected directly to a chartplotter will be shared with other networked chartplotters.
- Electronic cartography stored on internal or external memory on any chartplotter can be shared by all chartplotters on the same network.
- Up to 10 chartplotters can be connected to the same network.
- Up to 2 Radar scanners can be connected to the same network and used simultaneously.
- Multiple Sonar modules can be connected to the same network and used simultaneously.
- Chartplotters with an internal sonar module can share sonar data with networked chartplotters.

For details regarding internet connections, refer to:

- **p.82 — Internet connection**

For details regarding networking third-party Ethernet products, refer to:

- **p.130 — Ethernet (IPv4) networking of Raymarine devices with third-party products**

Wi-Fi networks

- Chartplotters cannot share data over a Wi-Fi connection.
- The chartplotter's Wi-Fi connection can be used to provide an internet connection to the chartplotter via an access point.
- Chartplotters that have an internet connection using Wi-Fi will share the internet connection with Ethernet networked chartplotters.
- An internet connection over Ethernet will take precedence over an internet connection over Wi-Fi.
- Data from ethernet networked devices is **not** bridged over a Wi-Fi connection.
- Data from NMEA 2000 / SeaTalk NG devices is **not** bridged over a Wi-Fi connection.

NMEA 2000 / SeaTalk NG networks

- Only the datamaster chartplotter needs to be connected to the NMEA 2000 / SeaTalk NG backbone.
- If more than one chartplotter is connected to the same backbone, the chartplotters must also be connected via RayNet to ensure that the datamaster provides consistent data to all repeater displays.
- The datamaster chartplotter will bridge NMEA 2000 / SeaTalk NG data over the Wi-Fi network to other chartplotters.
- More than one chartplotter can be connected to the same backbone for data redundancy purposes. If the **datamaster** chartplotter fails, another networked chartplotter can take its place as the datamaster. All chartplotters on the same backbone must have the same software version.

Networking with legacy chartplotters

- Axiom 2-Series chartplotters cannot be networked to legacy chartplotters running LightHouse 2.

- Axiom-Series chartplotters running earlier versions of LightHouse 3 can be networked to legacy chartplotters. For further details on networking legacy chartplotters, refer to:
  - **p.129 —** Legacy eS and gS Series compatibility with Legacy eS and gS Series compatibility with **Axiom-Series** displays
- Alpha Performance displays cannot be networked to legacy displays running LightHouse 2.

16.2 NMEA 2000 / SeaTalk NG connection

The display can be connected to a NMEA 2000 / SeaTalk NG network by connecting a spur cable to the DeviceNet connector located on the supplied power / NMEA 2000 cable.

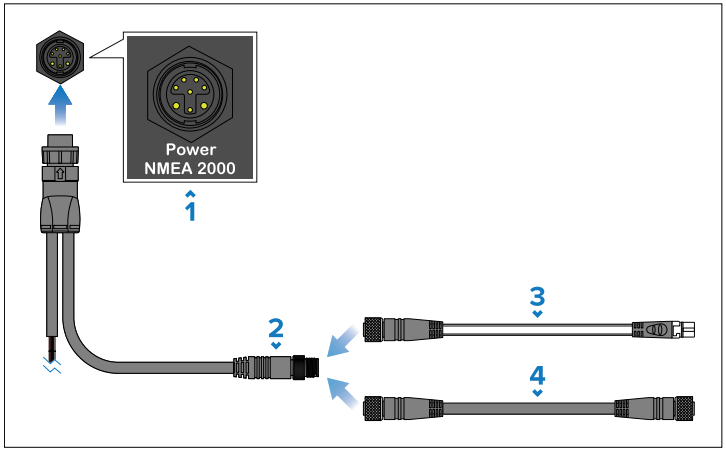

1. Display's power / NMEA 2000 connector.
2. Power / NMEA 2000 cable's DeviceNet (Micro-C 5 pin male) connector.
3. You can connect the display to a SeaTalk NG network backbone using a DeviceNet to SeaTalk NG adpator cable (not supplied).
4. Alternatively, you can connect the display to a NMEA 2000 backbone using a standard DeviceNet cable (not supplied).

Note:

1. NMEA 2000 / SeaTalk NG devices must be connected to a correctly terminated backbone.
2. NMEA 2000 / SeaTalk NG devices can NOT be connected directly to the display.
3. Refer to the instructions supplied with your NMEA 2000 / SeaTalk NG device for details on creating a backbone.

For a list of available SeaTalk NG cables, refer to:

- **p.118 — Spares and accessories**

16.3 NMEA 0183 connection

The display can transmit and receive NMEA 0183 data when using a compatible NMEA 2000 to NMEA 0183 converter, such as the Actisense® NGW-1 converter (part number: A80721), connected to the same NMEA 2000 / SeaTalk NG network as the display.

Important:
Ensure all devices are powered off before making connections.

Connect the converter to your NMEA 2000 or SeaTalk NG network, using either a DeviceNet to SeaTalk NG adaptor cable, or a DeviceNet cable as appropriate. Then, connect the converter's NMEA 0183 bare wires to the relevant wires on your NMEA 0183 device, and crimp and insulate the wires.

Note:
The details below are provided as an example of how to connect a device using the Actisense® NGW-1 converter (A80721). Depending on your NMEA 0183 device, you may require a different converter. The converter and device wire colors may also vary from those shown. Refer to the instructions supplied with your NMEA 0183 device and your converter to identify correct signal connections.

Example NMEA 0183 version 2 / 3 device connection using the Actisense® NGW-1 converter

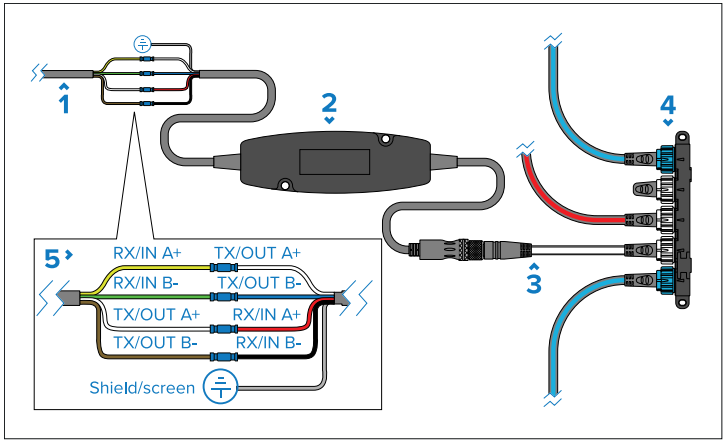

1. Device NMEA 0183 wires.
2. NMEA 2000 to NMEA 0183 converter (e.g. Actisense® NGW-1 converter, A80721).
3. SeaTalk NG (female) to DeviceNet (female) adaptor cable (e.g. A06045 or A06075).
4. SeaTalk NG network (requires dedicated 12 V dc power supply).
5. NMEA 0183 wire connections. It is recommended that wire connections are made using crimps and then insulated using insulation tape.

Example NMEA 0183 version 2 / 3 device connections

Converter signal (wire color)	NMEA 0183 device signal
TX/OUT A+ (White)	RX/IN A+
TX/OUT B- (Blue)	RX/IN B-
RX/IN A+ (Red)	TX/OUT A+
RX/IN B- (Black)	TX/OUT B-
Shield/Screen	Vessel Ground

If your NMEA 0183 device is a version 1 device (i.e.: it only has 3 NMEA 0183 wires), the connection will differ from that described above. Please see below for alternative wiring:

Example NMEA 0183 version 1 receiving device connections

Converter signal (wire color)	Receiving NMEA 0183 device signal
TX/OUT A+ (White)	RX/IN
TX/OUT B- (Blue)	NOT CONNECTED
Shield/Screen	Vessel Ground

Example NMEA 0183 version 1 transmitting device connections

Converter signal (wire color)	Transmitting NMEA 0183 device signal
RX/IN A+ (Red)	TX/OUT
RX/IN B- (Black)	Vessel Ground
Shield/Screen	Vessel Ground

16.4 Network connection

The display can be connected to compatible network products by connecting a network cable from the product to a **NETWORK** connector located on the rear of the display. Alternatively, the display can be connected to a network switch, e.g.: RNS-5, or the YachtSense Link marine router.

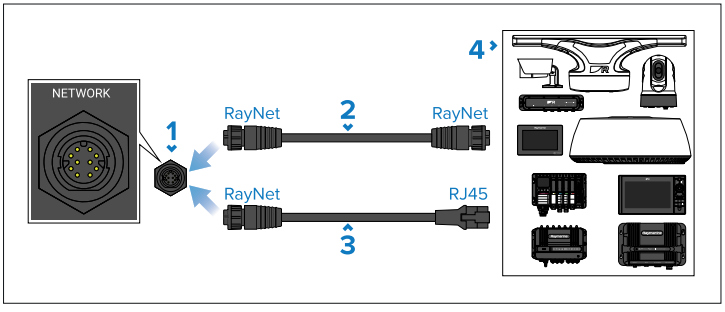

1. Display's **NETWORK** connector.

2. RayNet to RayNet cable — Connect one end of the RayNet cable to your display, and the opposite end to a RayNet device or RayNet network switch.
3. RayNet to RJ45 adapter cable — Connect the RayNet end of the cable to your display, and the opposite end to a network device with an RJ45 connector, or an RJ45 coupler.
4. Examples of compatible network devices with RayNet or RJ45 connectors (e.g.: Radar scanners, Sonar modules, Displays, Network switches, Cameras etc).

For a list of available network cables, refer to:

- **p.118 — Spares and accessories**

16.5 Internet connection

Some features require the display to have a connection to the internet.

Note:
In versions of the YachtSense Link router software *later than* **v4.20**, the display cannot connect to the router's Wi-Fi access point.

The display can be connected to the internet using the following methods:

- Connecting the display's Wi-Fi connection to a Wi-Fi access point which has an internet connection, such as marina Wi-Fi or mobile device. For connection details, refer to:
  - **p.82 — Connecting to the internet using Wi-Fi**
- Connecting the display's RayNet Ethernet connection to a YachtSense Link router which has internet access. Requires YachtSense Link router software **v4.20** or above.
- Connecting the display's Wi-Fi connection to a YachtSense Link router which has internet access. Requires YachtSense Link router software **v4.17** *or earlier*.
- Connecting the display's Wi-Fi or RayNet Ethernet connection to a third-party router which has internet access

YachtSense Link network connection

For optimum internet performance, Raymarine chartplotters should be connected to the router via a wired RayNet Ethernet connection.

For YachtSense Link router software versions from **v4.20** onwards, it is no longer possible for a display to connect to the router's Wi-Fi Access Point.

Software version	Description
Earlier than **v4.20**	Display may be connected to the YachtSense Link router's Wi-Fi Access Point. However, functionality will be limited to providing an internet connection for third-party apps which require internet access.
v4.20 *or later*	Display cannot connect to the YachtSense Link router's Wi-Fi Access Point. **Note:** For YachtSense Link routers which previously had a Wi-Fi connection to a display and have since been upgraded to **v4.20** from an earlier software version, the display will receive an IP address conflict notification. To correct the conflict, select *[Forget network]* in the displayed notification popup.

Connecting to the internet using Wi-Fi

The display can be connected directly to an access point that has an internet connection.

From the Homescreen:

1. Select the *[Apps]* icon from the Homescreen.

   The app launcher is displayed.
2. Select the connection status button, located at the top right of the app launcher page.

   The Wi-Fi settings page is displayed and will scan for available networks.

Note:
If there is a YachtSense Link router connected to your system, selecting this button will display the router's web interface.

3. Select the relevant Wi-Fi access point.
4. Enter the password for the network and select *[Connect]*.
   Your display will now connect to the access point.
5. Select the *[Back]* triangle symbol or the *[Home]* circle symbol at the bottom of the screen.

Your display should now have an internet connection.

Wi-Fi settings (Axiom-Series displays)

The Wi-Fi settings menu provides settings to connect the display to a Wi-Fi access point or hotspot.

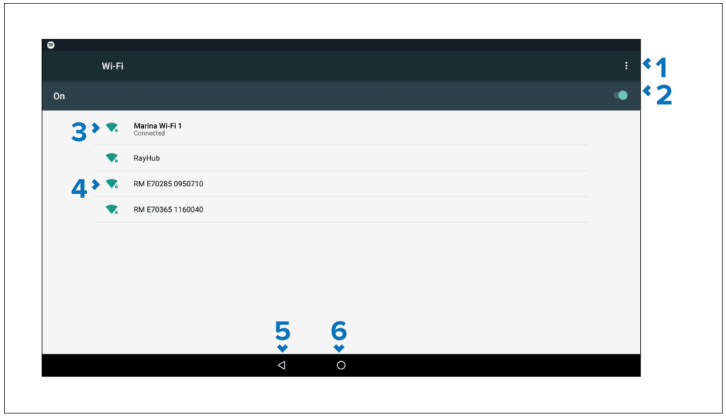

1. Wi-Fi options — Provides the following options:
   - Add network — Manually add a network.
   - Saved networks — View a list of all saved networks.
   - Refresh — Rescan available networks.
   - Advanced — View advanced network settings.
2. Enable/Disable Wi-Fi.
3. Connected access point.
4. Available access points.
5. Back button — Go back to the previous menu.
6. Home button — Go back to the previous menu.

CHAPTER 17: USB CONNECTIONS

CHAPTER CONTENTS

- 17.1 Accessory connection (page 85)

17.1 Accessory connection

The **ACCESSORY** connector can be used to connect an external memory card reader or external storage device to the display.

The following functions require a card reader attached to the display:

- use of electronic cartography — alternatively cartography can be shared from a networked display that does have a card reader attached.
- updating product software — alternatively if your display has a connection to the internet you can check online for software updates.
- import and export user data (waypoints, routes and tracks) — alternatively user data can be imported and exported from a networked display that does have a card reader attached.
- backup and restore settings — alternatively settings can be backed up and restored from a networked display that does have a card reader attached.
- viewing pdf files
- (1) capturing and viewing screenshots or images (.png, .jpg files)
- (2) recording and viewing video files (.mov files)
- installation of third-party LightHouse app (.apk files) (for installation only; apps cannot be run directly from storage device).

In addition to the storage uses listed above, the USB slot on the RCR-SDUSB can also supply 0.5A of current to charge mobile devices.

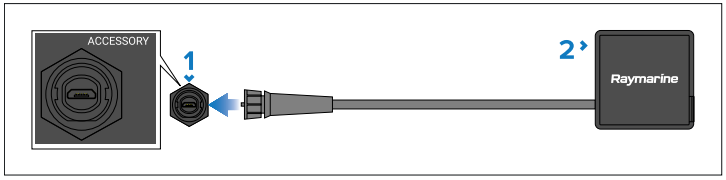

1. Display's **ACCESSORY** connector.
2. Accessory device:
   - **RCR-SDUSB** (part number: A80440) — Includes 1x SD card slot (or MicroSD card when using an SD card adaptor) and 1x USB (Type A connector) (e.g. for connection of an external USB hard drive or pen / flash drive).
   - **RCR-1** (part number A80585) — Includes 1x MicroSD card slot.
   - **Bulkhead Mount Micro-USB Socket** (part number: A80630) — Includes 1x Micro-USB (Type Micro A connector) (e.g. for connection of an external USB hard drive or pen / flash drive; an additional adaptor may be required for the connection of some USB devices).
- To store images (.png, .jpg files), *[External SD]* or *[External USB]* must be selected as the *[Screenshot File]* location on the *[This display]* tab in the main display settings menu (accessible from Homescreen).
- To store video (.mov files), *[External SD]* or *[External USB]* must be selected as the *[Save Files]* location on the *[Photo & Video recording]* tab in the Video app settings menu.

For installation details for these devices, please refer to the instructions provided with your accessory.

Fitting suppression ferrites

In certain installation scenarios interference may be experienced in the form of data corruption when reading and writing to external storage via the card reader. Under these circumstances the supplied suppression ferrites should be fitted to the card reader's cable, as described below.

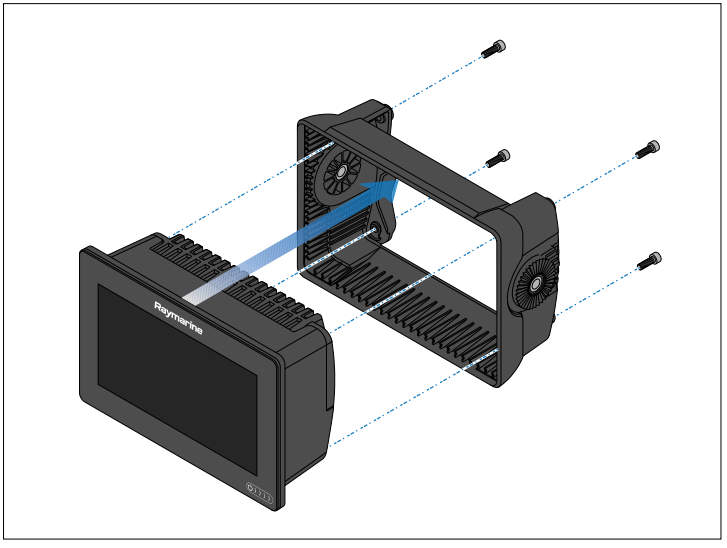

Two of the suppression ferrites should be fitted at 6 mm (0.24 in) intervals from the connector end of the cable and the third ferrite at a distance of 53 mm (2.09 in) from the rear of the card reader. Cable ties are also supplied to help secure each ferrite in place.



Warning: USB **device power**

Do NOT connect any device to the product's USB connection that requires an external power source.

CHAPTER 18: MAINTAINING YOUR DISPLAY

CHAPTER CONTENTS

- 18.1 Service and maintenance (page 88)
- 18.2 Product cleaning (page 88)

18.1 Service and maintenance

This product contains no user serviceable components. Please refer all maintenance and repair to authorized Raymarine dealers. Unauthorized repair may affect your warranty.



Warning: High voltage

This product contains high voltage. Adjustments require specialized service procedures and tools only available to qualified service technicians. There are no user serviceable parts or adjustments. The operator should never remove the cover or attempt to service the product.



Warning: FCC Warning (Part 15.21)

Changes or modifications to this equipment not expressly approved in writing by Teledyne Raymarine UK Limited could violate compliance with FCC rules and void the user's authority to operate the equipment.

Caution: Sun covers

• Sun covers are used to protect the display screen against the damaging effects of ultraviolet (UV) light. If your product is supplied with a sun cover always ensure it is fitted when the product is not in use.

• To avoid potential loss of the sun cover, ensure that the sun cover is removed when travelling at high speed, whether in the water or when the vessel is being towed.

• To avoid potential screen damage, ensure that the rear surface of the sun cover and the display screen are clean and free from debris before placing the sun cover on the screen.

Routine equipment checks

It is recommended that you perform the following routine checks, on a regular basis, to ensure the correct and reliable operation of your equipment:

- Examine all cables for signs of damage or wear and tear.
- Check that all cables are securely connected.

18.2 Product cleaning

Best cleaning practices.

When cleaning products:

• Switch off power supply.

• Use a clean damp cloth to wipe clean.

• Do NOT use: abrasive, acidic, ammonia, solvent or other chemical-based cleaning products.

• Do NOT use a jet wash.

Cleaning the display case

The display is a sealed unit and does not require regular cleaning. If it is necessary to clean the display, follow this basic procedure:

1. Switch off the power to the display.
2. Wipe the case with a clean, lint-free cloth.
3. If necessary, use a mild detergent to remove grease marks.

Cleaning the display screen

A coating is applied to the display screen. This makes it water repellent, and prevents glare. To avoid damaging this coating, follow this procedure:

1. Switch off the power to the display.
2. Rinse the screen with fresh water to remove all dirt particles and salt deposits.
3. Allow the screen to dry naturally.
4. If any smears remain, very gently wipe the screen with a clean microfibre cleaning cloth.

Cleaning the sun cover

The supplied sun cover features an adhesive surface. In certain conditions unwanted contaminants may stick to this surface. To avoid damaging the monitor display, clean the sun cover regularly following this procedure:

1. Carefully remove the sun cover from the display.

2. Rinse the sun cover with fresh water to remove all dirt particles and salt deposits.
3. Allow the sun cover to dry naturally.

CHAPTER 19: OPERATION

CHAPTER CONTENTS

- 19.1 Operation instructions (page 91)

19.1 Operation instructions

For detailed operation instructions for your product, refer to the documentation that accompanies your display.

Document	Description	Link
81406	LightHouse 4 Operation Instructions	www.bit.ly/LH4-docs
81370	LightHouse 3 Operation Instructions	www.bit.ly/LH3-docs

CHAPTER 20: TROUBLESHOOTING

CHAPTER CONTENTS

- 20.1 Troubleshooting (page 93)
- 20.2 LED Diagnostics (page 93)
- 20.3 Miscellaneous troubleshooting (page 94)
- 20.4 Power up troubleshooting (page 94)
- 20.5 GNSS (GPS) troubleshooting (page 95)
- 20.6 Sonar troubleshooting (page 96)
- 20.7 Wi-Fi troubleshooting (page 99)
- 20.8 Touchscreen troubleshooting (page 101)

20.1 Troubleshooting

The troubleshooting section provides possible causes and the corrective action required for common problems that are associated with the installation and operation of your product.

Before packing and shipping, all products are subjected to comprehensive testing and quality assurance programs. If you do experience problems with your product, this section will help you to diagnose and correct problems to restore normal operation.

If after referring to this section you are still having problems with your product, please refer to the *Technical support and servicing* section of this manual for useful links and contact details.

20.2 LED Diagnostics

The display's "Power swipe" area is illuminated using LEDs. The LED color and flash sequence identifies the status of the display, along with any error codes.

LED indication	Status and required action
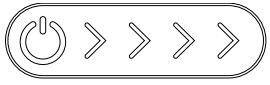	**(White): Powered up OK** Normal operation — no user action is required.
	**(Red): Standby** Swipe to power up display.
	**(Blue): Recovery mode** Follow the power on reset instructions: **p.95 — Performing a power on reset**
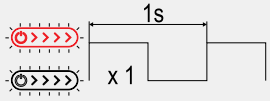	**(Red flash, 1 per second): Low voltage** • Increase supply voltage to within operating temperature range. • Check power cabling and connections for damage and corrosion; replace if required.
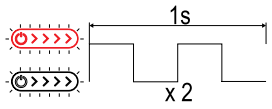	**(Red flash, 2 per second): High voltage** • Reduce supply voltage to within operating temperature range.
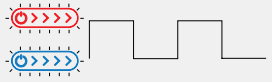	**(Red / Blue alternating flash): High temperature** • Check display installation for adequate ventilation and 'free' space around rear of display. • Check ambient temperature; if high, consider powering down the display until ambient temperature reduces.

20.3 Miscellaneous troubleshooting

Miscellaneous problems and their possible causes and solutions are described here.

Product behaves erratically (frequent unexpected resets / system crashes, or other erratic behavior):

Possible causes	Possible solutions
Intermittent problem with power to the product.	• Check relevant fuses and breakers. • Check that the power supply cable is sound, and that all connections are tight and free from corrosion. • Check that the power source is of the correct voltage, and that sufficient current is being provided to the product.
Software mismatch on system (upgrade required):	Go to https://bit.ly/rym-software for the latest software downloads.
Corrupt data / other unknown issue:	Perform a factory reset — refer to the relevant *Installation Instructions* document. **Important:** This will result in the loss of any settings and user data stored on the product. Save any important data to a memory card before resetting.

20.4 Power up troubleshooting

Troubleshooting assistance with typical causes of power-related issues, and their solutions.

Product does not power up, or keeps switching off

Possible causes	Possible solutions
Blown fuse / tripped breaker:	1. Check condition of relevant fuses and breakers and connections, replace if necessary. (Refer to the *Power Connections* section of your product's Installation Instructions for fuse ratings.) 2. If fuse keeps blowing, check for cable damage, broken connector pins, or incorrect wiring.
Poor / damaged / insecure power supply cable / connections:	1. Check that the power cable connector is correctly orientated and fully inserted into the product's *Power* connector, and locked in position. 2. Check the power supply cable and connectors for signs of damage or corrosion, and replace if necessary. 3. With the product switched on, try carefully flexing the power cable near to the product's *Power* connector to see if this causes the unit to restart or lose power. Replace if necessary. 4. Check the vessel's battery voltage and the condition of the battery terminals and power supply cables, ensuring connections are secure, clean and free from corrosion. Replace if necessary. 5. With the product under load, using a multi-meter, check for high voltage drop across all connectors / fuses etc, and replace if necessary.
Incorrect power connection:	The vessel's power supply may be wired incorrectly. Ensure that the product's *Installation Instructions* have been followed completely.

Product will not start up (restart loop)

Possible causes	Possible solutions
Power supply and connection:	See possible solutions from the table above, entitled '*Product does not power up, or keeps switching off*'.
Software corruption:	1. In the unlikely event that the product's software has become corrupted, try downloading and installing the latest software from: www.bit.ly/rym-software 2. If your product includes a display: as a last resort, attempt to perform a 'Power on Reset'. Be aware that this will delete all settings / presets and user data, and revert the unit back to factory default settings.

Performing a power on reset on touch-only displays

Important:

• Before performing a power on reset, ensure you have backed up your settings and user data (waypoints, routes and tracks) to a memory card.

• You may also want to save any crash logs that are stored on your display to a memory card, for future reference.

1. Switch off power at the breaker to ensure that the display is completely powered off, and not in Standby mode. Alternatively, remove the power cable from the display.
2. Power on your display, and within approximately 10 seconds, swipe your finger from right to left **5 times** across the *[Power]* button swipe area (i.e. the opposite direction to powering on).

   Recovery options are displayed.
3. Swipe your finger from right to left **twice** to highlight the *[Wipe data / factory reset]* option.
4. Swipe your finger from left to right **once** to accept the Disclaimer.
5. Swipe your finger from right to left **once** to highlight *[Yes]*.
6. Swipe your finger from left to right **once** to restore your display to factory default settings.
7. When *[Data wipe complete]* is displayed, swipe your finger from left to right to restart your display.

20.5 GNSS (GPS) troubleshooting

Problems with the GNSS (GPS) and their possible causes and solutions are described here. Your position fix coordinates are displayed in the status area located in the top left corner of the Homescreen.

No position fix

Possible causes	Possible solutions
Display installation location (e.g.: installed below decks or in close proximity to equipment which may cause interference).	Connect an external passive GNSS (GPS) antenna such as the GA200 to the display GPS antenna connection.
Internal GNSS (GPS) receiver disabled.	When using your product's internal GNSS (GPS) receiver, ensure that it is enabled in the relevant settings menu. To access the relevant menu, select the status area located in the top left corner of the Homescreen and select *[Satellites]* and then select the *[Settings]* tab, locate the Internal GPS option and ensure it is enabled.
External GNSS (GPS) receiver connection fault.	When using an external GNSS (GPS) receiver, ensure that connections are secure and that the cabling is free from damage.

Possible causes	Possible solutions
External GNSS (GPS) receiver or antenna location (e.g.: installed below decks or in close proximity to equipment which may cause interference).	Ensure the GNSS (GPS) receiver or antenna has a clear unobstructed view of the sky. Refer to the documentation supplied with your external receiver / antenna and ensure location requirements have been adhered to.
Geographic location or prevailing conditions preventing satellite fix.	Check periodically to see if a fix is obtained in better conditions or another geographic location.

20.6 Sonar troubleshooting

Problems that can be encountered with your sonar module and possible causes and solutions are described here.

Note:
This troubleshooting guide assumes that you have a compatible transducer connected to either your chartplotter directly (for Sonar-variant displays only), or an external sonar module, which is correctly networked to your chartplotter.

Scrolling image is not being displayed:

Possible causes	Possible solutions
Sonar disabled	Select *[Ping Enable]* from the Sonar app's Sounder menu.
Incorrect transducer selected	Check that the correct transducer is selected in the Sonar app's Transducer menu.
Damaged cables	1. Check that the transducer cable connector is fully inserted and locked in position. 2. Check the power supply cable and connectors for signs of damage or corrosion, replace if necessary. 3. With the unit turned on, try flexing the cable near to the display connector to see if this causes the unit to restart or lose power. Replace if necessary. 4. Check the vessel's battery voltage, the condition of the battery terminals and power supply cables, ensuring connections are secure, clean and free from corrosion, replace if necessary. 5. With the product under load, using a multi-meter, check for high voltage drop across all connectors / fuses etc (this can cause the Sonar applications to stop scrolling or the unit to reset or switch off). Replace if necessary.
Damaged or fouled transducer	Check the condition of the transducer, ensuring that it is not damaged and is free from debris / fouling. Clean or replace as necessary.
Wrong transducer fitted	Ensure that he transducer is compatible with your system.

Possible causes	Possible solutions
External sonar module: / RayNet network problem.	• Check that the unit is correctly connected to the multifunction display or Raymarine network switch. If a crossover coupler or other coupler cable / adapter is used, check all connections, ensuring that they are secure, clean, and free from corrosion. Replace if necessary.
External sonar module: Software mismatch between equipment may prevent communication.	Ensure that all Raymarine products contain the latest available software. Check the Raymarine website for software version information: https://bit.ly/rym-software

No depth reading / lost bottom lock:

Possible causes	Possible solutions
Transducer location	Check that the transducer has been installed in accordance with the instructions provided with the transducer.
Transducer angle	If the transducer angle is too great, the beam can miss the bottom. Adjust the transducer angle and re-check.
Transducer kicked-up	If the transducer has a kick-up mechanism, check that it has not kicked up due to hitting an object.
Power source insufficient	With the product under load, using a multi-meter, check the power supply voltage as close to the unit as possible to establish actual voltage when the current is flowing. (Check your product's Technical specification for power supply requirements.)
Damaged or fouled transducer	Check the condition of the transducer, ensuring that it is not damaged and is free from debris / fouling.
Damaged cables	1. Check the unit's connector for broken or bent pins. 2. Check that the cable connector is fully inserted into the unit and that the locking collar is in the locked position. 3. Check the cable and connectors for signs of damage or corrosion. Replace if necessary. 4. With the unit switched on, try flexing the power cable near to the display connector to see if this causes the unit to restart or lose power. Replace if necessary. 5. Check the vessel's battery voltage, the condition of the battery terminals and power supply cables, ensuring that connections are secure, clean and free from corrosion. Replace if necessary. 6. With the product under load, using a multi-meter, check for high voltage drop across all connectors / fuses etc. (Voltage drops can cause the Sonar applications to stop scrolling or the unit to reset or switch off.) Replace if necessary.
Vessel speed too high	Slow the vessel speed and re-check.
Bottom too shallow or too deep	The bottom depth may be outside of the transducer's depth range. Move vessel to shallower or deeper waters as relevant, and re-check.

Poor / problematic image

Possible causes	Possible solutions
Vessel stationary	Fish arches are not displayed if the vessel is stationary; fish will appear on the display as straight lines.
Scrolling paused or speed set too low	Unpause or increase sonar scrolling speed.
Sensitivity settings may be inappropriate for present conditions.	Check and adjust sensitivity settings or perform a Sonar reset.
Damaged cables	1. Check the unit's connector for broken or bent pins. 2. Check that the cable connector is fully inserted into the unit and that the locking collar is in the locked position. 3. Check the cable and connectors for signs of damage or corrosion, replace if necessary. 4. With the unit switched on, try flexing the power cable near to the display connector to see if this causes the unit to restart or lose power. Replace if necessary. 5. Check the vessel's battery voltage, the condition of the battery terminals and power supply cables, ensuring that connections are secure, clean, and free from corrosion. Replace if necessary. 6. With the product under load, using a multi-meter, check for high voltage drop across all connectors / fuses etc. (Voltage drops can cause the Sonar applications to stop scrolling or the unit to reset or switch off.) Replace if necessary.
Transducer location	• Check that the transducer has been installed in accordance with the instructions provided with the transducer. • If a transom mount transducer is mounted too high on the transom it may be lifting out of the water, check that the transducer face is fully submerged when planing and turning.
Transducer kicked-up	If the transducer has a kick-up mechanism, check that it has not kicked up due to hitting an object.
Damaged or fouled transducer	Check the condition of the transducer, ensuring that it is not damaged and is free from debris / fouling.
Damaged transducer cable	Check that the transducer cable and connection is free from damage and that the connections are secure and free from corrosion.
Turbulence around the transducer at higher speeds may affect transducer performance	Slow the vessel speed and recheck.
Interference from another transducer	1. Switch off the transducer causing the interference. 2. Re-position the transducers so that they are further apart.
Unit power supply fault	Check the voltage from the power supply, if this is too low it can affect the unit's transmitting power.

20.7 Wi-Fi troubleshooting

Before troubleshooting problems with your Wi-Fi connection, ensure that you have followed the Wi-Fi location requirements guidance provided in the relevant *Installation Instructions*, and have also performed a power cycle / restart of the devices that you are experiencing problems with.

Cannot find network

Possible causes	Possible solutions
Wi-Fi not currently enabled on devices.	Ensure that Wi-Fi is enabled on both Wi-Fi devices, and then re-scan available networks.
Some devices may automatically turn off Wi-Fi when not in use to save power.	Power cycle / restart devices, and then re-scan available networks.
Device not broadcasting.	1. Enable broadcasting of the device's network using the Wi-Fi settings on the device you are trying to connect to. 2. You may still be able to connect to the device even when it is not broadcasting, by manually entering the device's Wi-Fi Name / SSID and passphrase in the connection settings of the device you are trying to connect to.
Devices out of range or signal being blocked.	Move devices physically closer together or, if possible, remove the obstructions and then re-scan available networks.

Cannot connect to network

Possible causes	Possible solutions
Some devices may automatically turn off Wi-Fi when not in use to save power.	Power cycle / restart devices, and then retry the connection.
Trying to connect to the wrong Wi-Fi network	Ensure that you are trying to connect to the correct Wi-Fi network. The Wi-Fi network's name can be found in the Wi-Fi settings on the broadcasting device (the device that you are trying to connect to).
Incorrect network credentials	Ensure that you are using the correct passphrase. The Wi-Fi network's passphrase can be found in the Wi-Fi settings on the broadcasting device (the device that you are trying to connect to).
Bulkheads, decks and other heavy structure can degrade and even block the Wi-Fi signal. Depending on the thickness and material used it may not always be possible to pass a Wi-Fi signal through certain structures	1. Try repositioning the devices so that structure is removed from the direct line of sight between the devices, or: 2. If possible, use a wired connection instead.

Possible causes	Possible solutions
Interference being caused by other Wi-Fi enabled or older Bluetooth enabled devices (Bluetooth and Wi-Fi both operate in the 2.4 GHz frequency range, some older bluetooth devices may interfere with Wi-Fi signals.)	1. Change the Wi-Fi Channel of the device you are trying to connect to, and then retry the connection. You can use a free Wi-Fi analyzer app on your mobile or tablet device to help you choose a better channel (i.e. a channel with the least amount of traffic). 2. Temporarily disable each wireless device in turn until you have identified the device causing the interference.
Interference caused by other devices that use the 2.4GHz frequency band. The following common devices use the 2.4GHz frequency band: • Microwave ovens • Fluorescent lighting • Cordless phones / baby monitors • Motion sensors	Temporarily switch off each device in turn until you have identified the device causing the interference, then remove or re-position the offending device(s).
Interference caused by electrical and electronic devices and associated cabling could generate an electromagnetic field which may interfere with the Wi-Fi signal.	Temporarily switch off each item in turn until you have identified the device causing the interference, then remove or re-position the offending device(s).

Connection extremely slow and / or keeps dropping out

Possible causes	Possible solutions
Wi-Fi performance degrades over distance, resulting in products farther away receiving less network bandwidth. Products installed close to their maximum Wi-Fi range will experience slow connection speeds, signal drop-outs, or not being able to connect at all.	• Move devices physically closer together. • For fixed installations such as a Quantum Radar, enable the Wi-Fi connection on a display installed closer to the device.
Interference being caused by other Wi-Fi enabled or older Bluetooth enabled devices (Bluetooth and Wi-Fi both operate in the 2.4 GHz frequency band; some older Bluetooth devices may interfere with Wi-Fi signals.)	1. Change the Wi-Fi Channel of the device you are trying to connect to, and then retry the connection. You can use a free Wi-Fi analyzer app on your mobile or tablet device to help you choose a better channel (i.e. a channel with the least amount of traffic). 2. Temporarily switch off each device in turn until you have identified the device causing the interference, then remove or re-position the offending device(s).
Interference from devices on other vessels. When in close proximity to other vessels, such as when moored up in a marina, many other Wi-Fi signals may be present.	1. Change the Wi-Fi Channel of the device you are trying to connect to, and then retry the connection. You can use a free Wi-Fi analyzer app on your mobile or tablet device to help you choose a better channel (i.e. a channel with the least amount of traffic). 2. If possible, move your vessel to a location with less Wi-Fi traffic.

Network connection established, but no data

Possible causes	Possible solutions
Connected to the wrong network	Ensure that your device is connected to the correct network.
Device software incompatibility	Ensure both devices are running the latest available software.
The device may be defective	1. Try updating software to a later version, or: 2. Re-install the software. 3. Obtain new replacement device.

Mobile application running slowly, or not at all

Possible causes	Possible solutions
Raymarine® app not installed	Install mobile app from relevant app store.
Raymarine® app version not compatible with display software	Ensure mobile app and display software are latest available versions.
Mobile apps not enabled on the chartplotter.	Enable “Viewing only” or “Remote Control” as required in the Mobile Apps setting on your chartplotter.

20.8 Touchscreen troubleshooting

Problems with the touchscreen and their possible causes and solutions are described here.

Touchscreen does not operate as expected:

Possible causes	Possible solutions
TouchLock is enabled.	Swipe your finger from left to right across the *[Power]* button swipe area to de-activate the TouchLock.
Screen is not being operated with bare fingers — for example, gloves are being worn.	Bare fingers must make contact with the screen for correct operation. Alternatively you may use conductive gloves.
Water deposits on the screen.	Carefully clean and dry the screen in accordance with the instructions provided.

CHAPTER 21: TECHNICAL SUPPORT

CHAPTER CONTENTS

- 21.1 Raymarine technical support and servicing (page 103)
- 21.2 Learning resources (page 105)

21.1 Raymarine technical support and servicing

Raymarine provides a comprehensive product support service, as well as warranty, service, and repairs. You can access these services through the Raymarine website, telephone, and e-mail.

Product information

If you need to request service or support, please have the following information to hand:

- Product name.
- Product identity.
- Serial number.
- Software application version.
- System diagrams.

Servicing and warranty

Raymarine offers dedicated service departments for warranty, service, and repairs.
Visit the Raymarine website to **read the latest warranty policy**, and **register** your product's warranty online:

- www.bit.ly/rym-warranty

United Kingdom (UK), EMEA, and Asia Pacific:

- Web: www.bit.ly/rym-service
- Tel: +44 (0)1329 246 932

United States (US):

- Web: www.bit.ly/rym-service
- Tel: +1 (603) 324 7900

Web support

Please visit the "Support" area of the Raymarine website for:

- **Manuals and Documents** — www.bit.ly/rym-docs
- **Technical support forum** — www.bit.ly/rym-support
- **Software updates** — www.bit.ly/rym-software

Telephone and online support

Region	Contact details
All regions	**Online support:** www.bit.ly/rym-support
United Kingdom (UK) and EMEA	**Telephone:** +44 (0)1329 246 777 **Address:** Marine House, Cartwright Drive, Fareham, PO15 5RJ, UK.
United States (US)	**Telephone:** Tel: +1 (603) 324 7900 (Toll-free: +800 539 5539) **Address:** 110 Lowell Road, Hudson, NH 03051, USA.
Australia and New Zealand (Raymarine subsidiary)	**Telephone:** +61 2 8977 0300 **Address:** Suite 1.01, 26 Rodborough Road, Frenchs Forest, NSW, 2086, Australia.
France (Raymarine subsidiary)	**Telephone:** +33 (0)1 46 49 72 30 **Address:** 35 avenue Michel Crépeau, 17000 La Rochelle - France.
Germany (Raymarine subsidiary)	**Telephone:** +49 40 237 808 0 **Address:** Atlantic-Haus, Zirkusweg 1, 20359 Hamburg.
Italy (Raymarine subsidiary)	**Telephone:** +39 02 9945 1001 **Address:** Via L. Manara 2, 20812 Limbiate (MB), Italy.
Spain (Authorized Raymarine distributor)	**Telephone:** +34 96 2965 102 **Email:** sat@azimut.es
Netherlands / Benelux (Authorized Raymarine distributor)	**Telephone:** +31 (0)26 3614 905 **Address:** Florijnweg 21G, 6883 JN VELP, Nederland.

Region	Contact details
Sweden (Raymarine subsidiary)	**Telephone:** +46 (0)317 633 670 **Address:** Bolshedens Industriväg 18, 427 50 Billdal, Sweden.
Finland (Raymarine subsidiary)	**Telephone:** +358 (0)207 619 937 **Address:** Suomalaistentie 1-3, 02270 Espoo, Finland.
Norway (Raymarine subsidiary)	**Telephone:** +47 692 64 600 **Address:** Årvollskogen 30, 1529 Moss, Norway.
Denmark (Raymarine subsidiary)	**Telephone:** +45 437 164 64 **Address:** Centervej 7, 4600 Køge, Denmark.
Russia (Distributor)	**Telephone:** Tel: +7 495 788 0508 **Email:** info@mikstmarine.ru

Viewing product information

Use the *[Settings]* menu to view hardware and software information about your display, and connected products.

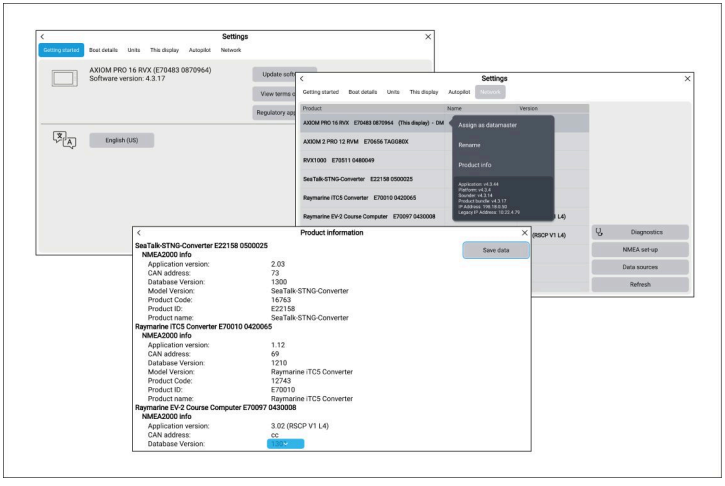

1. Select *[Settings]*, from the Homescreen.

   The *[Getting started]* menu contains hardware and software information for your display.
2. You can view further information about your display, or view information about products networked using SeaTalk HS and SeaTalk NG / NMEA 2000, by selecting the *[Network]* tab, then:
   i. to display detailed software information and your display's network IP address, select your display from the list.
   ii. to display detailed diagnostics information for all products, select *[Product info]* from the *[Diagnostics]* pop over menu.

Remote Support via AnyDesk

LightHouse 3 software versions v3.13 or later support remote support functions via the preloaded AnyDesk app.

The AnyDesk app enables a Raymarine Product Support representative to remotely connect to and control your display over an Internet connection, for the purposes of technical support and troubleshooting.

To get started, you will first need to contact Raymarine Product Support. If the representative considers that your support case would benefit from a remote session, you need to first ensure that

your display has an active Internet connection via Wi-Fi. Next, launch the AnyDesk app from your display's homescreen, and then provide the displayed unique ID to the Raymarine Product Support representative. Then follow any further instructions provided to you by the representative.

Attention

• AnyDesk is provided for troubleshooting and support purposes only, and is NOT intended to perform remote functions on your vessel. Raymarine will NOT be held liable for damage or injury to equipment or persons caused by the use of a remote connection to your display.

• Do not disclose your AnyDesk ID to anyone other than authorized Raymarine Product Support personnel.

• Do not use the AnyDesk app to remotely activate connected devices such as Autopilot, Radar or Sonar hardware.

21.2 Learning resources

Raymarine has produced a range of learning resources to help you get the most out of your products.

Video tutorials

Raymarine official channel on YouTube

- http://www.youtube.com/user/RaymarineInc

Training courses

Raymarine regularly runs a range of in-depth training courses to help you make the most of your products. Visit the Training section of the Raymarine website for more information:

- www.bit.ly/rym-training

Technical support forum

You can use the Technical support forum to ask a technical question about a Raymarine product or to find out how other customers are using their Raymarine equipment. The resource is regularly updated with contributions from Raymarine customers and staff:

- www.bit.ly/rym-support

CHAPTER 22: TECHNICAL SPECIFICATION — AXIOM 7"

CHAPTER CONTENTS

- 22.1 Physical specification (page 107)
- 22.2 Power specification (page 107)
- 22.3 Environmental specification (page 107)
- 22.4 LCD specification (page 107)
- 22.5 Network specification (page 108)
- 22.6 Storage specification (page 108)
- 22.7 DownVision sonar specification (page 108)
- 22.8 RealVision 3D sonar specification (page 108)
- 22.9 Internal GNSS (GPS / GLONASS) receiver specification (page 109)

22.1 Physical specification

Specification	
Dimensions (trunnion mounted):	• **Width:** 250.4 mm (9.86 in) • **Height:** 162.5 mm (6.4 in) • [1]**Depth:** 218 mm (8.58 in) For further dimensional information for your display refer to: • **p.35 — Axiom 7"** trunnion mount dimensions
Dimensions (surface / flush mounted):	• **Width:** 201.1 mm (7.92 in) • **Height:** 133 mm (5.24 in) • [1]**Depth:** 218 mm (8.58 in) For further dimensional information for your display refer to: • **p.35 — Axiom 7"** surface and flush mount dimensions

Note:
[1]Maximum depth including straight transducer connector cable.

22.2 Power specification

Specification	
Nominal supply voltage:	12 V dc
Operating voltage range:	8 V dc to 16 V dc
Inline fuse / thermal breaker ratings:	7A
Power consumption (max):	• Chartplotter only display variants — 7.34 W • DV display variants — 10.02 W • RV 3D display variants — 9.84 W

Note:

• Power consumption figures for DV display variants were taken with a CPT-100DVS transducer connected.

• Power consumption figures for RV 3D display variants were taken with a RV-100 transducer connected.

22.3 Environmental specification

Specification	
Operating temperature range:	-25° C (-13° F) to + 55° C (131° F)
Storage temperature range:	-30° C (-22° F) to + 70° C (158° F)
Humidity:	Up to 93% @ 40° C (104° F)
Water ingress protection:	IPx6

22.4 LCD specification

Specification	
Size (diagonal):	7.0”
Type:	TN (Twisted Nematic)
Color depth:	24 bit
Resolution:	WVGA 800 x 480
Ratio:	5:3
Illumination:	1200 nits / 1200 cd/m^2

Specification	
Viewing angle:	Top 60 / Bottom 70 / Left 70 / Right 70
Number of simultaneous touches:	2

22.5 Network specification

Specification	
Transducer:	• (Axiom RV 3D display variants only) 1x 25-pin RealVision type connector • (Axiom DV display variants only) 1x 9-pin DownVision type connector
NMEA 2000:	1 x DeviceNet male connector (built into power cable.)
Accessory:	1 x USB Micro B
Network:	1 x RayNet (Ethernet) connector (10/100 Mbits/s)
Wi-Fi:	1 x 802.11/b/g/n
Bluetooth:	1 x Bluetooth V4.0
LEN (Load Equivalency Number):	1

22.6 Storage specification

Specification	
Internal:	4 Gbyte Solid State
External MicroSD card:	1 x MicroSDXC card slot
External (via RCR-SDUSB accessory):	• 1 x SD card slot • 1 x USB A
External (via RCR-2 accessory):	2 x MicroSDHC card slots

22.7 DownVision sonar specification

The following specification only applies to DownVision products.

Specification	
Channels:	• 1 x CHIRP sonar • 1 x DownVision
Beam coverage:	• CHIRP sonar — conical beam • DownVision — Wide (port / starboard) and thin (fore / aft) fan beam.
Range:	• CHIRP sonar = 0.6 M (2 ft) to 274 m (900 ft) • DownVision = 0.6 M (2 ft) to 183 m (600 ft)

22.8 RealVision 3D sonar specification

The following specification only applies to RealVision 3D products.

Specification	
Sonar channels: (*Output power / Responsive Frequency Range*)	• **RealVision 3D** (*70 W / 350 kHz ± 5%*) • **SideVision** (*70 W / 350 kHz ± 5%*) • **DownVision** (*35 W / 350 kHz ± 5%*) • **Conical CHIRP**: **High** (*100 W / 200 kHz ± 5%*)
Sensors:	• Temperature sensor • AHRS (Attitude and Heading Reference System) sensor

Note:
For sonar range and depth specifications, refer to the *Technical Specifications* provided in the documentation that accompanies your sonar transducer.

22.9 Internal GNSS (GPS / GLONASS) receiver specification

Specification	
Cold start:	<2 minutes
Receiver IC Sensitivity:	• 165 dBm (Tracking) • 160 dBm (Acquisition) • 148 dBm (Cold start)
GNSS compatibility:	• GPS • GLONASS • BeiDou
SBAS compatibility:	• EGNOS • GAGAN • MSAS • QZSS • WAAS
Operating frequency:	1574 MHz to 1605 MHz
Signal Acquisition:	Automatic
Almanac Update:	Automatic
Geodetic Datum:	WGS-84 (alternatives can be selected on the chartplotter)
Refresh Rate:	10 Hz (position updates 10 times per second)
Antenna:	• Internal — Ceramic chip mounted near top of unit
Position Accuracy:	• Without SBAS: <= 15 meters (49.2 ft.), 95% of the time • With SBAS: <= 5 meters (16.4 ft.), 95% of the time

CHAPTER 23: TECHNICAL SPECIFICATION — AXIOM 9"

CHAPTER CONTENTS

- 23.1 Physical specification (page 111)
- 23.2 Power specification (page 111)
- 23.3 Environmental specification (page 111)
- 23.4 LCD specifications (page 111)
- 23.5 Network specification (page 111)
- 23.6 Storage specification (page 112)
- 23.7 RealVision 3D sonar specification (page 112)
- 23.8 Internal GNSS (GPS / GLONASS) receiver specification (page 112)

23.1 Physical specification

Specification	
Dimensions (trunnion mounted):	• **Width:** 265.03 mm (10.43 in) • **Height:** 187.81 mm (7.39 in) • [1]**Depth:** 178 mm (7.01 in) For further dimensional information for your display refer to: **p.36 — Axiom 9"** and **12"** trunnion mount dimensions
Dimensions (surface / flush mounted):	• **Width:** 244.08 mm (9.61 in) • **Height:** 157.78 mm (6.21 in) • [1]**Depth:** 178 mm (7.01 in) For further dimensional information for your display refer to: **p.37 — Axiom 9"** and **12"** surface and flush mount dimensions

Note:
[1]Maximum depth including straight transducer connector cable.

23.2 Power specification

Specification	
Nominal supply voltage:	12 V dc
Operating voltage range:	8 V dc to 16 V dc
Inline fuse / thermal breaker ratings:	7A
Power consumption (max):	• Chartplotter only display variants — 8.95 W • RV 3D display variants — 11.98 W

Note:
Power consumption figures for RV 3D display variants were taken with a RV-100 transducer connected.

23.3 Environmental specification

Specification	
Operating temperature range:	-25° C (-13° F) to + 55° C (131° F)
Storage temperature range:	-30° C (-22° F) to + 70° C (158° F)
Humidity:	Up to 93% @ 40° C (104° F)
Water ingress protection:	IPx6

23.4 LCD specifications

Specification	
Size (diagonal):	9.0”
Type:	TN (Twisted Nematic)
Color depth:	24 bit
Resolution:	WVGA 800 x 480
Ratio:	5:3
Illumination:	1200 nits / 1200 cd/m^2
Viewing angle:	Top 60 / Bottom 70 / Left 70 / Right 70
Number of simultaneous touches:	2

23.5 Network specification

Specification	
Transducer:	(Axiom RV 3D display variants only) 1x 25-pin RealVision type connector
NMEA 2000:	1 x DeviceNet male connector (built into power cable.)

Specification	
Accessory:	1 x USB Micro B
Network:	1 x RayNet (Ethernet) connector (10/100 Mbits/s)
Wi-Fi:	1 x 802.11/b/g/n
Bluetooth:	1 x Bluetooth V4.0
LEN (Load Equivalency Number):	1

23.6 Storage specification

Specification	
Internal:	4 Gbyte Solid State
External MicroSD card:	1 x MicroSDXC card slot
External (via RCR-SDUSB accessory):	• 1 x SD card slot • 1 x USB A
External (via RCR-2 accessory):	2 x MicroSDHC card slots

23.7 RealVision 3D sonar specification

The following specification only applies to RealVision 3D products.

Specification	
Sonar channels: (*Output power / Responsive Frequency Range*)	• **RealVision 3D** (*70 W / 350 kHz ± 5%*) • **SideVision** (*70 W / 350 kHz ± 5%*) • **DownVision** (*35 W / 350 kHz ± 5%*) • **Conical CHIRP**: **High** (*100 W / 200 kHz ± 5%*)
Sensors:	• Temperature sensor • AHRS (Attitude and Heading Reference System) sensor

Note:
For sonar range and depth specifications, refer to the *Technical Specifications* provided in the documentation that accompanies your sonar transducer.

23.8 Internal GNSS (GPS / GLONASS) receiver specification

Specification	
Cold start:	<2 minutes
Receiver IC Sensitivity:	• 165 dBm (Tracking) • 160 dBm (Acquisition) • 148 dBm (Cold start)
GNSS compatibility:	• GPS • GLONASS • BeiDou
SBAS compatibility:	• EGNOS • GAGAN • MSAS • QZSS • WAAS
Operating frequency:	1574 MHz to 1605 MHz
Signal Acquisition:	Automatic
Almanac Update:	Automatic
Geodetic Datum:	WGS-84 (alternatives can be selected on the chartplotter)
Refresh Rate:	10 Hz (position updates 10 times per second)

Specification	
Antenna:	• Internal — Ceramic chip mounted near top of unit
Position Accuracy:	• Without SBAS: <= 15 meters (49.2 ft.), 95% of the time • With SBAS: <= 5 meters (16.4 ft.), 95% of the time

CHAPTER 24: TECHNICAL SPECIFICATION — AXIOM 12"

CHAPTER CONTENTS

- 24.1 Physical specification (page 115)
- 24.2 Power specification (page 115)
- 24.3 Environmental specification (page 115)
- 24.4 LCD specification (page 115)
- 24.5 Network specification (page 115)
- 24.6 Storage specification (page 116)
- 24.7 RealVision 3D sonar specification (page 116)
- 24.8 Internal GNSS (GPS / GLONASS) receiver specification (page 116)

24.1 Physical specification

Specification	
Dimensions (trunnion mounted):	• **Width:** 314 mm (12.36 in) • **Height:** 226.72 mm (8.93 in) • [1]**Depth:** 178 mm (7.01 in) For further dimensional information for your display refer to: **p.36 — Axiom 9"** and **12"** trunnion mount dimensions
Dimensions (surface / flush mounted):	• **Width:** 314 mm (12.36 in) • **Height:** 217 mm (8.54 in) • [1]**Depth:** 178 mm (7.01 in) For further dimensional information for your display refer to: **p.37 — Axiom 9"** and **12"** surface and flush mount dimensions

Note:
[1]Maximum depth including straight transducer connector cable.

24.2 Power specification

Specification	
Nominal supply voltage:	12 V dc
Operating voltage range:	8 V dc to 16 V dc
Inline fuse / thermal breaker ratings:	7A
Power consumption (max):	• Chartplotter only display variants — 15.48 W • RV 3D display variants — 18.96 W

Note:
Power consumption figures for RV 3D display variants were taken with a RV-100 transducer connected.

24.3 Environmental specification

Specification	
Operating temperature range:	-25° C (-13° F) to + 55° C (131° F)
Storage temperature range:	-30° C (-22° F) to + 70° C (158° F)
Humidity:	Up to 93% @ 40° C (104° F)
Water ingress protection:	IPx6

24.4 LCD specification

Specification	
Size (diagonal):	12.1”
Type:	IPS (In-Plane Switching)
Color depth:	24 bit
Resolution:	WXGA 1280 x 800
Ratio:	16:10
Illumination:	1200 nits / 1200 cd/m^2
Viewing angle:	Top 88 / Bottom 88 / Left 88 / Right 88
Number of simultaneous touches:	1 to 16

24.5 Network specification

Specification	
Transducer:	(Axiom RV 3D display variants only) 1x 25-pin RealVision type connector
NMEA 2000:	1 x DeviceNet male connector (built into power cable.)

Specification	
Accessory:	1 x USB Micro B
Network:	1 x RayNet (Ethernet) connector (10/100 Mbits/s)
Wi-Fi:	1 x 802.11/b/g/n
Bluetooth:	1 x Bluetooth V4.0
LEN (Load Equivalency Number):	1

24.6 Storage specification

Specification	
Internal:	4 Gbyte Solid State
External MicroSD card:	1 x MicroSDXC card slot
External (via RCR-SDUSB accessory):	• 1 x SD card slot • 1 x USB A
External (via RCR-2 accessory):	2 x MicroSDHC card slots

24.7 RealVision 3D sonar specification

The following specification only applies to RealVision 3D products.

Specification	
Sonar channels: (*Output power / Responsive Frequency Range*)	• **RealVision 3D** (*70 W / 350 kHz ± 5%*) • **SideVision** (*70 W / 350 kHz ± 5%*) • **DownVision** (*35 W / 350 kHz ± 5%*) • **Conical CHIRP**: **High** (*100 W / 200 kHz ± 5%*)
Sensors:	• Temperature sensor • AHRS (Attitude and Heading Reference System) sensor

Note:
For sonar range and depth specifications, refer to the *Technical Specifications* provided in the documentation that accompanies your sonar transducer.

24.8 Internal GNSS (GPS / GLONASS) receiver specification

Specification	
Cold start:	<2 minutes
Receiver IC Sensitivity:	• 165 dBm (Tracking) • 160 dBm (Acquisition) • 148 dBm (Cold start)
GNSS compatibility:	• GPS • GLONASS • BeiDou
SBAS compatibility:	• EGNOS • GAGAN • MSAS • QZSS • WAAS
Operating frequency:	1574 MHz to 1605 MHz
Signal Acquisition:	Automatic
Almanac Update:	Automatic
Geodetic Datum:	WGS-84 (alternatives can be selected on the chartplotter)
Refresh Rate:	10 Hz (position updates 10 times per second)

Specification	
Antenna:	• Internal — Ceramic chip mounted near top of unit
Position Accuracy:	• Without SBAS: <= 15 meters (49.2 ft.), 95% of the time • With SBAS: <= 5 meters (16.4 ft.), 95% of the time

CHAPTER 25: SPARES AND ACCESSORIES

CHAPTER CONTENTS

- 25.1 Spares (page 119)
- 25.2 Accessories (page 119)
- 25.3 RayNet to RayNet cables and connectors (page 121)
- 25.4 RayNet to RJ45, and RJ45 (SeaTalk HS) adapter cables (page 122)
- 25.5 SeaTalk NG cables and accessories (page 124)

25.1 Spares

The following spares are available for your product:

Part	Description
R70523	Power / DeviceNet combined cable 1.5m (4.92 ft)
R70561	Right angled Power / DeviceNet combined cable 1.5m (4.92 ft)
R70525	7” Trunnion mount suncover
R70526	7” Rear cover (for trunnion and rear installation)
R70527	7” Surface mount suncover
R70528	7” Rear mounting kit, includes: • 2 x Metal brackets • 4 x Studs • 4 x Thumb nuts
R70524	7” Metal trunnion mounting kit, includes: • 1x Trunnion bracket • 2x Knobs
R70529	9” Metal trunnion mounting kit • 1x Trunnion bracket • 2x Knobs
R70530	9” Trunnion mount suncover
R70531	9” Rear mounting kit, includes: • 2 x Metal brackets • 4 x Studs • 4 x Thumb nuts
R70532	12” Metal trunnion mounting kit, includes: • 1x Trunnion bracket • 2x Knobs
R70533	12” Trunnion mount suncover
R70534	12” Rear mounting kit, includes: • 2 x Metal brackets • 4 x Studs • 4 x Thumb nuts

25.2 Accessories

The following accessories are available for your product:

Part	Description
A80440	RCR-SDUSB — external MicroSD and USB reader
A80515	Right-angled RV transducer adaptor cable
A80498	7” Front installation kit, includes: • Front mount adaptor • 2 x bezel pieces • 4 x self-tapping screws • Front mount suncover
A80499	7” Front mount suncover
A80500	9” Front installation kit, includes: • Front mount adaptor • 2 x bezel pieces • 4 x self-tapping screws • Front mount suncover
A80501	9” Front mount suncover

Part	Description
A80502	12” Front installation kit, includes: • Front mount adaptor • 2 x bezel pieces • 4 x self-tapping screws • Front mount suncover
A80503	12” Front mount suncover

Legacy chartplotter adaptor plates

Adaptor plates are available to enable installation of an Axiom chartplotter in the place of an existing legacy chartplotter.

Existing legacy chartplotter	Adaptor part number	New chartplotter	Fixing holes
a9x	A80526	Axiom 9"	Existing
a12x	A80527	Axiom 12"	New
c12x / e12x	A80528	Axiom 12"	Existing
C70 Classic	A80525	Axiom 9"	New
C80 / E80 Classic	A80564	Axiom 9"	Existing
C120 / E120 Classic	A80529	Axiom 12"	Existing
e7 / e7D	A80524	Axiom 7"	Existing

Note:
The adaptor plates have been designed to utilize your legacy chartplotter’s existing cut-out and fixing holes. In instances where it is not possible to re-use the existing fixing holes, a mounting template will be supplied with the adaptor plate which provides the location for the new fixing holes.

Axiom RV 3D variant — Transducer adaptor cables

The following adaptor cables enable an Axiom RV 3D display to be connected to a wider selection of transducers.

Part	Description
A80488	25-pin RV to 7-pin embedded transducer adaptor cable.
A80489	25-pin RV to 8-pin CP370 transducer adaptor cable.
A80490	25-pin RV to 9-pin DV transducer adaptor cable.
A80491	25-pin RV to 25-pin RV & 7-pin embedded transducers Y-cable.
A80492	25-pin RV to 25-pin RV & 8-pin CP370 transducers Y-cable.
A80493	25-pin RV to 7-pin embedded & 9-pin DV transducers Y-cable.
A80494	25-pin RV to 8-pin CP370 & 9-pin DV transducers Y-cable.

Axiom DV variant — Transducer adaptor cables

The following adaptor cables enable an Axiom RV 3D display to be connected to a wider selection of transducers.

Part	Description
A80484	9-pin DV to 7-pin Embedded Transducer Adapter
A80485	9-pin DV to 8-pin CP370 Transducer Adapter
A80486	9-pin DV to 9-pin DV & 7-Pin Embedded Transducers Y-Cable
A80487	9-pin DV to 9-pin DV & 8-Pin CP370 Transducers Y-Cable

25.3 RayNet to RayNet cables and connectors

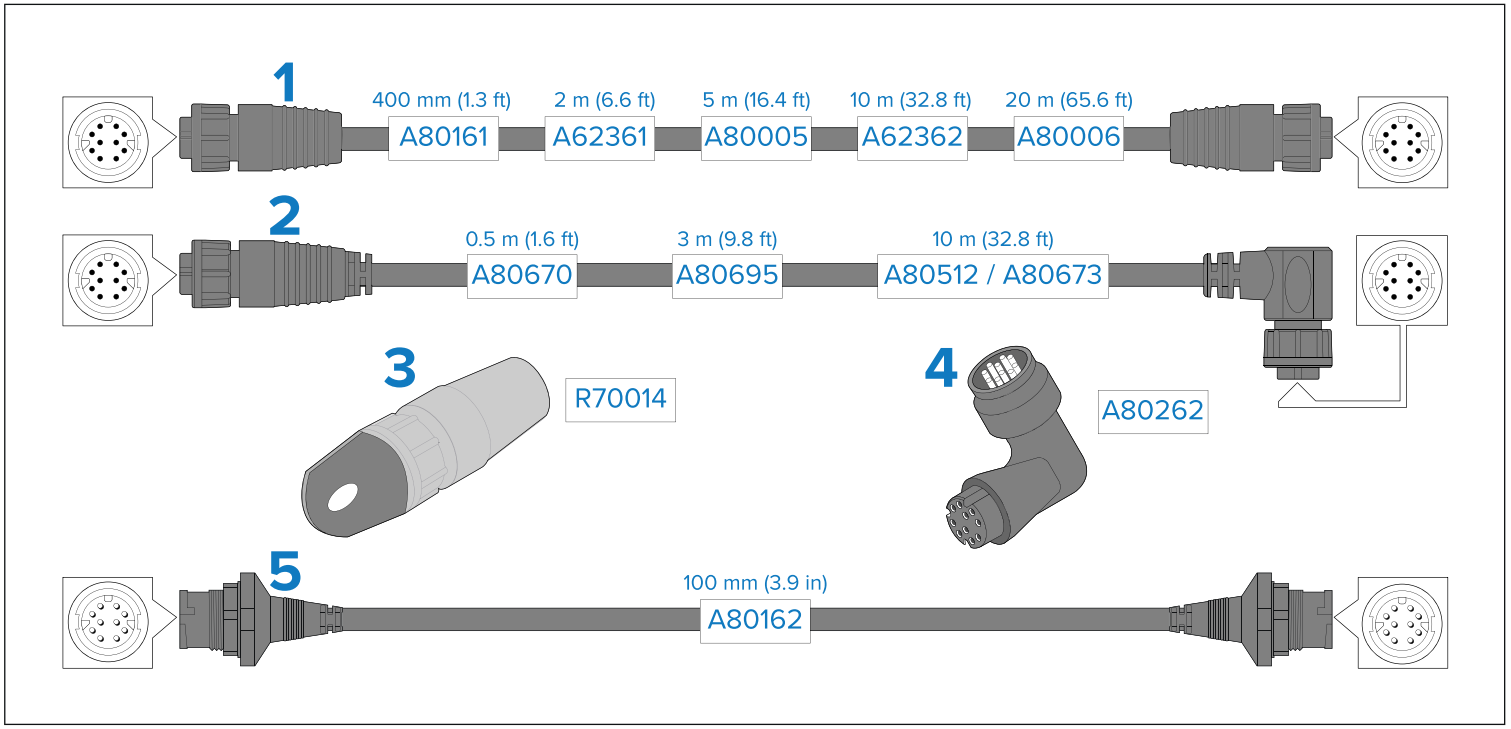

1. Standard RayNet connection cable with a RayNet (female) socket on both ends.
2. Right-angle RayNet connection cable with a straight RayNet (female) socket on one end, and a right-angle RayNet (female) socket on the other end. Suitable for connecting at 90° (right angle) to a device, for installations where space is limited.
3. RayNet cable puller (5 pack).
4. RayNet to RayNet right-angle coupler / adapter. Suitable for connecting RayNet cables at 90° (right angle) to devices, for installations where space is limited.
5. Adapter cable with a RayNet (male) plug on both ends. Suitable for joining (female) RayNet cables together for longer cable runs.

25.4 RayNet to RJ45, and RJ45 (SeaTalk HS) adapter cables

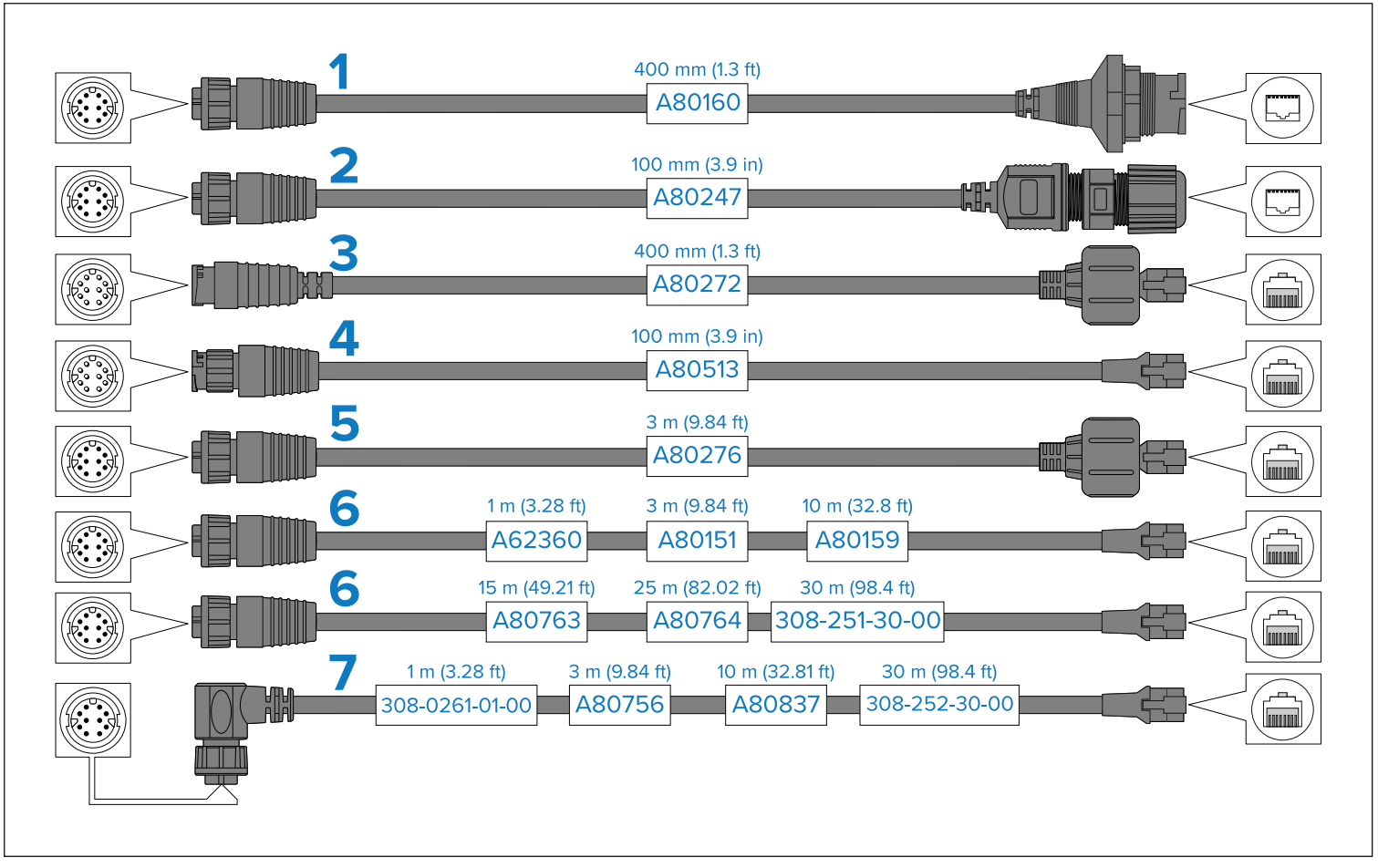

1. Adapter cable with a RayNet (female) socket on one end, and a waterproof (female) RJ45 (SeaTalk HS) socket on the other end, accepting the following cables with an RJ45 (SeaTalk HS) waterproof locking (male) plug:
   - A62245 (1.5 m).
   - A62246 (15 m).
2. Adapter cable with a RayNet (female) socket on one end, and a waterproof (female) RJ45 (SeaTalk HS) socket on the other end, along with a locking gland for a watertight fit.
3. Adapter cable with a RayNet (male) plug on one end, and an RJ45 (SeaTalk HS) waterproof (male) plug on the other end.

4. Adapter cable with a RayNet (male) plug on one end, and an RJ45 (male) plug on the other end.
5. Adapter cable with a RayNet (female) socket on one end, and an RJ45 (SeaTalk HS) waterproof (male) plug on the other end.
6. Adapter cable with a RayNet (female) socket on one end, and an RJ45 (male) plug on the other end.
7. Adapter cable with a right-angled RayNet (female) socket on one end, and an RJ45 (male) plug on the other end.

25.5 SeaTalk NG cables and accessories

SeaTalk NG cables and accessories for use with compatible products.

SeaTalk NG kits

SeaTalk NG kits enable you to create a simple SeaTalk NG backbone. **Starter kit (part number: T70134)** consists of:

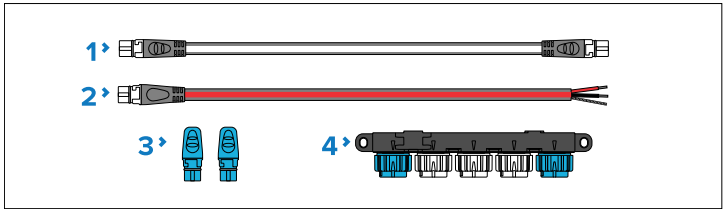

1. 1 x Spur cable 3 m (9.8 ft) (part number: **A06040**). Used to connect device to the SeaTalk NG backbone.
2. 1 x Power cable 2 m (6.6 ft) (part number: **A06049**). Used to provide 12 V dc power to the SeaTalk NG backbone.
3. 2 x Backbone terminators (part number: **A06031**). Terminators must be fitted to both ends of the SeaTalk NG backbone.
4. 1 x 5-Way connector (part number: **A06064**). Each connector block allows connection of up to 3 SeaTalk NG devices. Multiple connector blocks can be 'daisy chained' together.

Backbone kit (part number: A25062) consists of:

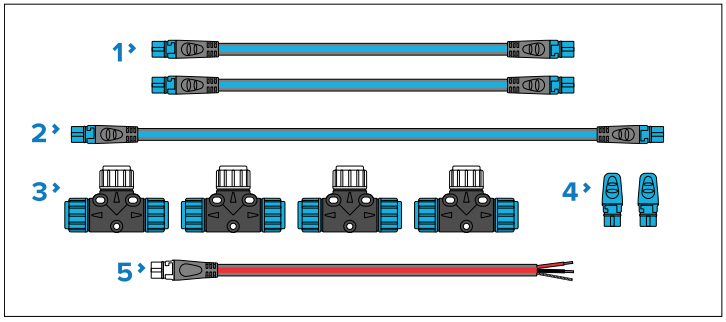

1. 2 x Backbone cables 5 m (16.4 ft) (part number: **A06036**). Used to create and extend the SeaTalk NG backbone.
2. 1 x Backbone cable 20 m (65.6 ft) (part number: **A06037**). Used to create and extend the SeaTalk NG backbone.
3. 4 x T-piece (part number: **A06028**). Each T-piece allows connection of one SeaTalk NG device. Multiple T-pieces can be 'daisy chained' together.
4. 2 x Backbone terminators (part number: **A06031**). Terminators must be fitted to both ends of the SeaTalk NG backbone.
5. 1 x Power cable 2 m (6.6 ft) (part number: **A06049**). Used to provide 12 V dc power to the SeaTalk NG backbone.

Evolution-Series autopilot cable kit (part number: R70160) consists of:

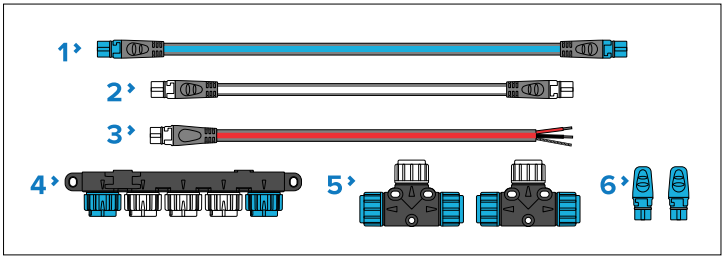

1. 1 x Backbone cable 5 m (16.4 ft) (part number: **A06036**). Used to create and extend the SeaTalk NG backbone.
2. 1 x Spur cable 1 m (3.3 ft) (part number: **A06040**). Used to connect device to the SeaTalk NG backbone.
3. 1 x Power cable 2 m (6.6 ft) (part number: **A06049**). Used to provide 12 V dc power to the SeaTalk NG backbone.
4. 1 x 5-Way connector (part number: **A06064**). Each connector block allows connection of up to 3 SeaTalk NG devices. Multiple connector blocks can be 'daisy chained' together.
5. 2 x T-pieces (part number: **A06028**). Each T-piece allows connection of one SeaTalk NG device. Multiple T-pieces can be 'daisy chained' together.
6. 2 x Backbone terminators (part number: **A06031**). Terminators must be fitted to both ends of the SeaTalk NG backbone.

SeaTalk 1 to SeaTalk NG converter kit (part number: E22158) consists of:

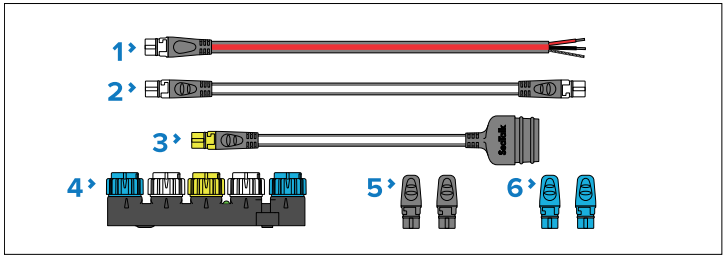

1. 1 x Power cable 2 m (6.6 ft) (part number: **A06049**). Used to provide 12 V dc power to the SeaTalk NG backbone.
2. 1 x Spur cable 1 m (3.3 ft) (part number: **A06039**). Used to connect a device to the SeaTalk NG backbone.
3. 1 x SeaTalk 1 (3 pin) to SeaTalk NG adapter cable 0.4 m (1.3 ft) (part number: **A22164**). Used to connect SeaTalk 1 devices to the SeaTalk NG backbone via the SeaTalk 1 to SeaTalk NG converter.
4. 1 x SeaTalk 1 to SeaTalk NG converter (part number: **E22158**). Each converter allows connection of one SeaTalk 1 device and up to 2 SeaTalk NG devices.
5. 2 x Spur blanking plugs (part number: **A06032**). Used to cover unused spur connections in 5-way blocks, T-piece connectors and SeaTalk 1 to SeaTalk NG converter.
6. 2 x Backbone terminators (part number: **A06031**). Terminators must be fitted to both ends of the SeaTalk NG backbone.

NMEA 0183 VHF 2-wire to SeaTalk NG converter kit (part number: E70196) consists of:

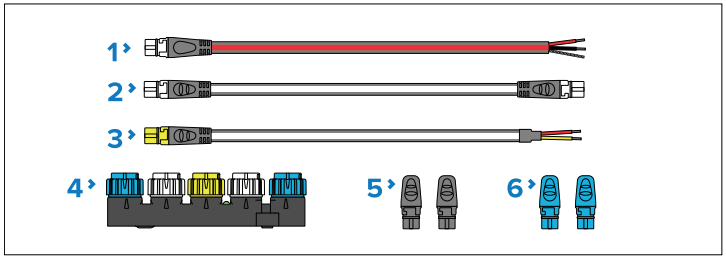

1. 1 x Power cable 2 m (6.6 ft) (part number: **A06049**). Used to provide 12 V dc power to the SeaTalk NG backbone.
2. 1 x Spur cable 1 m (3.3 ft) (part number: **A06039**). Used to connect a device to the SeaTalk NG backbone.
3. 1 x NMEA 0183 VHF stripped-end (2-wire) to SeaTalk NG adapter cable 1 m (3.3 ft) (part number: **A06071**). Used to connect an NMEA 0183 VHF radio to the SeaTalk NG backbone via the NMEA 0183 to SeaTalk NG converter.
4. 1 x SeaTalk 1 to SeaTalk NG converter (part number: **E22158**). Each converter allows connection of one SeaTalk 1 device and up to 2 SeaTalk NG devices.
5. 2 x Spur blanking plugs (part number: **A06032**). Used to cover unused spur connections in 5-way blocks, T-piece connectors, and the SeaTalk 1 to SeaTalk NG converter.
6. 2 x Backbone terminators (part number: **A06031**). Terminators must be fitted to both ends of the SeaTalk NG backbone.

SeaTalk NG spur cables

SeaTalk NG spur cables are required to connect devices to the SeaTalk NG backbone.

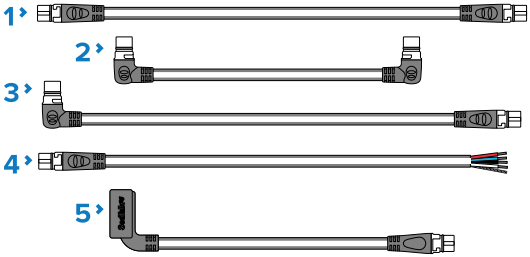

1. SeaTalk NG spur cables:
   - Spur cable 0.4 m (1.3 ft) (part number: **A06038**).
   - Spur cable 1 m (3.3 ft) (part number: **A06039**).
   - Spur cable 3 m (9.8 ft) (part number: **A06040**).
   - Spur cable 5 m (16.4 ft) (part number: **A06041**).
2. Elbow (right-angled) to elbow (right-angled) spur cable 0.4 m (1.3 ft) (part number: **A06042**). Used in confined spaces where a straight spur cable will not fit.
3. Elbow (right-angled) to straight spur cable 1 m (3.3 ft) (part number: **A06081**). Used in confined spaces where a straight spur cable will not fit.

4. SeaTalk NG to stripped-end spur cables (connects compatible products that do not have a SeaTalk NG connector, such as transducer pods):
   - SeaTalk NG to stripped-end spur cable 1 m (3.3 ft) (part number: **A06043**)
   - SeaTalk NG to stripped-end spur cable 3 m (9.8 ft) (part number: **A06044**)
5. ACU-200 / ACU-300 / ACU-400 / SPX-Series autopilot to SeaTalk NG spur cable 0.3 m (1.0 ft) (part number **R12112**). Connects the course computer to the SeaTalk NG backbone. This connection can also be used to provide 12 V dc power to the SeaTalk NG backbone.

SeaTalk NG backbone cables

SeaTalk NG backbone cables are used to create or extend a SeaTalk NG backbone.

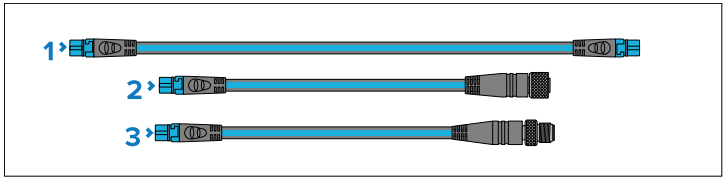

1. Backbone cables:
   - Backbone cable 0.4 m (1.3 ft) (part number: **A06033**).
   - Backbone cable 1 m (3.3 ft) (part number: **A06034**).
   - Backbone cable 3 m (9.8 ft) (part number: **A06035**).
   - Backbone cable 5 m (16.4 ft) (part number: **A06036**).
   - Backbone cable 9 m (29.5 ft) (part number: **A06068**).
   - Backbone cable 20 m (65.6 ft) (part number: **A06037**).
2. SeaTalk NG to DeviceNet (female) Backbone cable 0.4 m (1.3 ft) (part number: **A80675**)
3. SeaTalk NG to DeviceNet (male) Backbone cable 0.4 m (1.3 ft) (part number: **A80674**)

SeaTalk NG power cables

SeaTalk NG power cables are used to provide the SeaTalk NG backbone with a single 12 V dc power source. The power connection must include a 5 amp inline fuse (not supplied).



1. Power cable (straight) 2 m (6.6 ft) (part number: **A06049**).
2. Elbow (right-angled) power cable 2 m (6.6 ft) (part number: **A06070**).

SeaTalk NG connectors

SeaTalk NG connectors are used to connect SeaTalk NG devices to the SeaTalk NG backbone and to create and extend the backbone.

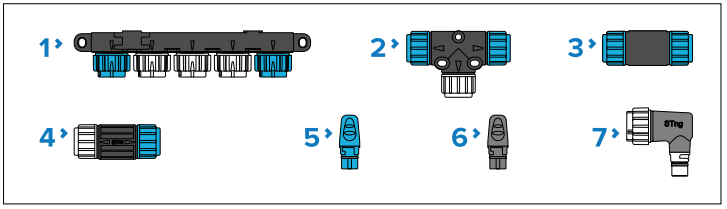

1. 5-Way connector (part number: **A06064**). Each connector block allows connection of up to 3 SeaTalk NG devices. Multiple connector blocks can be 'daisy chained' together.
2. T-piece (part number: **A06028**). Each T-piece allows connection of one SeaTalk NG device. Multiple T-pieces can be 'daisy chained' together.
3. Backbone extender (part number: **A06030**). Used to connect 2 backbone cables together.
4. Inline terminator (part number: **A80001**). Used to connect a spur cable and SeaTalk NG device at the end of a backbone instead of a backbone terminator.
5. Backbone terminator (part number: **A06031**). Terminators must be fitted to both ends of the SeaTalk NG backbone.
6. Spur blanking plug (part number: **A06032**). Used to cover unused spur connections in 5-Way blocks, T-piece connectors, or the SeaTalk 1 to SeaTalk NG converter.
7. Elbow (right-angled) spur connector (part number: **A06077**). Used in confined spaces where a straight spur cable will not fit.

SeaTalk NG adaptors and adaptor cables

SeaTalk NG adaptor cables are used to connect devices designed for different CAN Bus backbones (e.g.: SeaTalk 1 or DeviceNet) to the SeaTalk NG backbone.

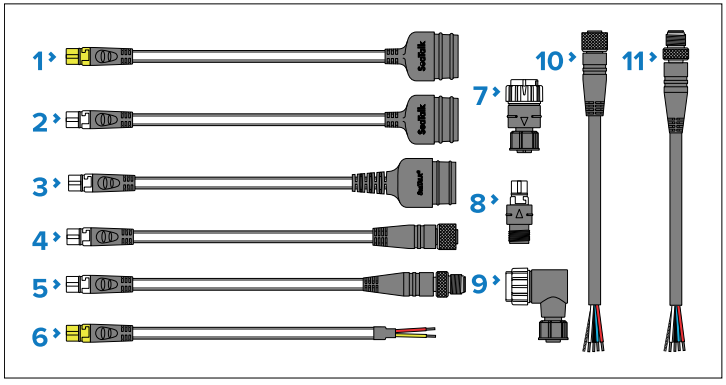

1. SeaTalk 1 (3 pin) to SeaTalk NG converter cable 1 m (3.3 ft) (part number: **A22164 / A06073**). Can be used to connect a SeaTalk 1 device to a SeaTalk NG backbone via the SeaTalk 1 to SeaTalk NG converter, or to connect a SeaTalk NG product directly to a SeaTalk 1 network.
2. SeaTalk 1 (3 pin) to SeaTalk NG adaptor cable 0.4 m (1.3 ft) (part number: **A06047**). Can be used to connect a SeaTalk 1 device to a SeaTalk NG backbone via the SeaTalk 1 to SeaTalk NG converter, or to connect a SeaTalk NG product directly to a SeaTalk 1 network.
3. SeaTalk 2 (5 pin) to SeaTalk NG adaptor cable 0.4 m (1.3 ft) (part number: **A06048**). Used to connect SeaTalk 2 devices or networks to a SeaTalk NG backbone.
4. SeaTalk NG to DeviceNet (female) adaptor cables connect NMEA 2000 devices that use a DeviceNet connector to the SeaTalk NG backbone, or connects SeaTalk NG devices to an NMEA 2000 network. The following cables are available:
   - SeaTalk NG to DeviceNet (female) adaptor cable 0.4 m (1.3 ft) (part number: **A06045**).
   - SeaTalk NG to DeviceNet (female) adaptor cable 1 m (3.3 ft) (part number: **A06075**).
5. SeaTalk NG to DeviceNet (male) adaptor cables. Connect NMEA 2000 devices that use a DeviceNet connector to the SeaTalk NG backbone, or connect SeaTalk NG devices to an NMEA 2000 network. The following cables are available:
   - SeaTalk NG to DeviceNet (male) adaptor cable 0.1 m (0.33 ft) (part number: **A06078**).
   - SeaTalk NG to DeviceNet (male) adaptor cable 0.4 m (1.3 ft) (part number: **A06074**).
   - SeaTalk NG to DeviceNet (male) adaptor cable 1 m (3.3 ft) (part number: **A06076**).
   - SeaTalk NG to DeviceNet (male) adaptor cable 1.5 m (4.92 ft) (part number: **A06046**).
6. NMEA 0183 stripped-end (2-wire) to SeaTalk NG adapter cable 1 m (3.3 ft) (part number: **A06071**). Used to connect an NMEA 0183 VHF radio to the SeaTalk NG backbone via the NMEA 0183 to SeaTalk NG converter.
7. SeaTalk NG (male) to DeviceNet (female) adaptor (**A06082***).
8. SeaTalk NG (female) to DeviceNet (male) adaptor (**A06083***).
9. SeaTalk NG (male) to DeviceNet (female) elbow (right-angled) adaptor (**A06084***).
10. DeviceNet (female) to stripped-end adaptor cable (0.4 m (1.3 ft)) (part number: **E05026**).
11. DeviceNet (male) to stripped-end adaptor cable (0.4 m (1.3 ft)) (part number: **E05027**).

Important:
* Do NOT connect the A06082, A06083, or A06084 adaptors directly to a backbone. Only connect as part of a **spur** connection between backbone and device.

Appendix A NMEA 2000 PGNs

For a list of supported NMEA 2000 PGNs, please refer to the relevant Operations manual for your display:

Document	Description	Link
81406	LightHouse 4 Operation Instructions	www.bit.ly/LH4-docs
81370	LightHouse 3 Operation Instructions	www.bit.ly/LH3-docs

Appendix B Legacy eS and gS Series compatibility with Legacy eS and gS Series compatibility with Axiom-Series displays

As Raymarine continues to develop new features and capabilities for the LightHouse 4 operating system, the ability to downgrade some Axiom-Series models to LightHouse software v3.11.42 (for the purposes of allowing mixed networks of Axiom-Series and legacy eS/gS Series displays) has ended.

The following table lists the Axiom display's compatibility status with legacy eS/gS Series displays.

Display	Compatibility in mixed systems featuring eS/gS Series displays
Axiom	**Yes** — Software must be downgraded to LightHouse v3.11.42

If you wish to continue using a mixed system of newer Axiom displays and legacy eS/gS Series displays, you must ensure that these displays are NOT connected on the same RayNet or SeaTalk NG networks.

Appendix C Ethernet (IPv4) networking of Raymarine devices with third-party products

Raymarine uses a custom Ethernet (IPv4) networking configuration. Use the following information to help you understand how Raymarine's Ethernet (IPv4) implementation interacts with third-party Ethernet (IPv4) devices on your vessel, such as routers, switches, Access Points (APs) etc.

Important:

• Third-party networking products such as routers, switches, and Access Points (APs) *may* work when connected to Raymarine networks, when configured correctly. However, correct operation is not guaranteed. It's important to refer to the instructions provided by the relevant third-party device manufacturer, to ensure that your intended use of a third-party device is consistent with the device's design intent.

• Raymarine does not warrant that Raymarine products are compatible with products manufactured by any person or entity other than Raymarine.

• When using third-party products in your Raymarine electronics network, you should be aware of, and understand, the concepts and limitations described in the following Disclaimer:
p.11 — Disclaimer

Overview

- Ethernet (IPv4) networking is a method for interconnecting multiple electronic devices, allowing many devices to function in a network and share data using only a single RJ45 or RayNet connection for each device.
- In order to function correctly, every Ethernet (IPv4) device (whether Raymarine or third-party) must have a unique IP address allocated to it, and it must not conflict with that of any other device.
- IPv4 addresses can be centrally-allocated to devices either **automatically**, using a method known as *DHCP* (Dynamic Host Configuration Protocol), or **manually** (i.e. allocated a static IP address). The most common method for allocating IPv4 addresses on vessel electronics networks is *DHCP*. In this configuration, the *server* device is known as a *DHCP server*.

Client / Server device	Example(s)
Raymarine IPv4 DHCP **client**	• Radar scanner (e.g. Quantum-Series) • Sonar module (e.g. CP470) • IP camera (e.g. CAM300)
Raymarine IPv4 DHCP **server** and self-addressing device	• Chartplotter, running the LightHouse operating system (e.g. Axiom-Series) • Marine Router (e.g. YachtSense Link)
Third-party IPv4 DHCP **client**	IP camera
Third-party IPv4 DHCP **server**	• Router • Switch • Access Point (AP)

Note:
The DHCP server maintains a pool of IP addresses and "leases" an address to any DHCP-enabled client, when the client device first powers up and announces its presence on the network. Because the IP addresses are dynamic (leased) rather than static (permanently assigned), addresses no longer in use are automatically returned to the DHCP server's pool, for subsequent reallocation.

It's also possible to have multiple DHCP servers issuing addresses on an IPv4 network, but to avoid addressing conflicts, all DHCP servers must be carefully configured to only allocate IP addresses in distinct address ranges. The *subnet mask* must also be carefully configured, to ensure that devices can correctly communicate with one another.

Implementation

- Raymarine Ethernet (IPv4) devices expect to use a private **Raymarine IPv4 network**, which is designed to be internal to the vessel only. Raymarine has carefully chosen a specific IP address range (**198.18.0.0/21**) to ensure that it does not interfere with

any external IP address ranges, or other legacy and real-world addressing constraints (including but not limited to marina Wi-Fi networks).

Note:
Raymarine's IP address range is for **local traffic** within the **vessel's private Raymarine network only**, and does NOT traverse across Raymarine products to external networks, or to the Internet.

- In a Raymarine Ethernet (IPv4) network, IP addresses are self-allocated by certain Raymarine equipment in the following range: **198.18.0.32 to 198.18.3.255** (inclusive). **You must avoid placing any devices in this range using manual (static) IP addresses.**
- Whether your network includes only Raymarine Ethernet (IP) devices, or a mixture of Raymarine and third-party Ethernet (IPv4) devices, you have 3 options for configuring the Ethernet (IPv4) network and managing the IP addresses for your devices:

  1. Use a Raymarine device as the sole DHCP server to allocate IP addresses automatically to all Raymarine and third-party Ethernet (IPv4) devices on the network. **For the purposes of simplicity and reliability, this is the recommended option for most vessels.** The following Raymarine devices can act as DHCP servers:

     a. **Raymarine chartplotter**, running LightHouse v3.15.62 or later., or

     b. **Raymarine YachtSense Link router**

Note:
If both a Raymarine chartplotter **and** YachtSense Link router are present in the same network, the YachtSense Link router MUST be configured as the DHCP server for that network. To facilitate this, the Raymarine chartplotter's DHCP setting defaults to *Automatic* as standard. On power up, if the YachtSense Link router is detected on the Ethernet network, any chartplotters in the network will disable their own *DHCP Server*, to permit the YachtSense Link router to manage the network's IP addresses. Only Raymarine chartplotters running LightHouse v4.1.65 or later are compatible with the YachtSense Link router. Additionally, the most recent versions of the LightHouse and YachtSense Link software must be used.

  2. Use a third-party Ethernet (IPv4) device (such as a router or Access Point) to allocate IP addresses automatically, as a sole *DHCP server*. To do this, refer to the *Configuring a third-party router as DHCP server* section, below.

Note:
Any Raymarine chartplotters will still self-allocate their own IP address, even if a third-party DHCP server is being used to allocate IP addresses to other Raymarine or non-Raymarine *DHCP client* devices (Camera, Radar, Sonar etc.) on the network.

  3. Manually configure static IP addresses for your devices. The address range **198.18.0.32 to 198.18.3.255** (inclusive) is used by Raymarine equipment, and any other third-party equipment on the network should not be set to a static IP address in this range. It should instead be set elsewhere in the 198.18.0.0/21 range.

Adding third-party devices to your Raymarine Ethernet (IP) network

- It is recommended that any third-party products connecting to a Raymarine Ethernet (IPv4) network (e.g., a third-party IP camera) are configured as DHCP clients, so that they automatically get allocated a correct IP address within the range used by the **Raymarine IPv4 network**. If this is not possible, (for example, in the scenario that your third-party IP Camera requires a static IP address), you should configure the product to have a static IP

address within the following range: **198.18.0.1 to 198.18.0.31** (inclusive).

- Any third-party router in your network should be performing IPv4 *Network Address Translation* (NAT) from the private address to another one on an upstream interface.

Configuring a third-party router as DHCP server

In the scenario that you wish to use a third-party DHCP server to allocate the IP addresses for your vessel's IPv4 network, use the following information to help you configure the third-party DHCP server to work with Raymarine Ethernet (IPv4) client devices:

1. Configure the third-party DHCP server / router to use Raymarine's subnet details, which are as follows:
   a. Set the DHCP server's IP address to **198.18.0.1**
   b. Set the *netmask* to /21, i.e. **255.255.248.0**
   c. Set the DHCP range from **198.18.4.0 to 198.18.7.254** (inclusive). If this is not possible, ensure that the address range is smaller than this (but within the range of **198.18.4.0 to 198.18.7.254** (inclusive)).
   d. The address range **198.18.0.32 to 198.18.3.255** (inclusive) is used by Raymarine equipment, and therefore you must ensure that any other third-party equipment on the network is NOT set to a static IP address in this range.
2. It may be necessary to set the DHCP setting for **all** of the chartplotters on the vessel to *[Off]*. However, the default option (*[Auto]*) will likely work fine in many cases. If for any reason the third-party DHCP server starts up after the chartplotter starts up, the user should manually set the chartplotter's DHCP switch to *[Off]*. This is because, when the chartplotter starts up, its DHCP *[Auto]* feature tries to detect if another DHCP server is already present on the network.
3. In case of failure of the third-party device, the chartplotters can be easily configured to be the DHCP server again, by setting the chartplotter's DHCP setting back to *[Auto]*.

Adding third-party Wi-Fi Access Points / Wi-Fi routers to your Raymarine Ethernet (IPv4) network

- There is a large volume of multicast IPv4 traffic on the Raymarine Ethernet (IPv4) network. Many consumer Wi-Fi Access Points / Wi-Fi routers simply bridge all multicast traffic from the Ethernet interface to the Wi-Fi interface when there are connected Wi-Fi clients. This will result not only in poor Wi-Fi performance but also in a reduction of usable Wi-Fi spectrum to other Wi-Fi users and vessels in the vicinity. If using a third-party Wi-Fi Access Point or Wi-Fi router, Raymarine recommends that *IGMP Snooping* is enabled on the third-party device, and additional checks are performed, in order to ensure that your device is not bridging any unexpected multicast traffic to its Wi-Fi interface from the Raymarine Ethernet (IPv4) network.
- Raymarine's YachtSense Link router is pre-configured with IGMP Snooping enabled, and therefore does not bridge internal multicast traffic on the wired network to the Wi-Fi network. No additional configuration is required in this respect.

Index

A

Accessories 119
  Network adapter cables 122
  Network cables 121
  RayNet cables 121
  SeaTalk NG adaptor cables 127
  SeaTalk NG backbone cables 126
  SeaTalk NG cables 124
  SeaTalk NG connectors 126
  SeaTalk NG kits 124
  SeaTalk NG Power cables 126
  SeaTalk NG spur cables 125
Accessory connection 85
Adaptor plates 120
Applicable products 17

C

Cable
  Bend radius 62
  Protection 62–63
  Routing 62
  Security 62
  Strain relief 62
Cable extension 72
Cabling
  Circuit isolation 62
Circuit isolation 62
Cleaning 88
  Screen 88
Compass safe distance 40
Compliance
  Cybersecurity 12
Connecting cables 63
Connection
  NMEA 2000 80
  Power 66
  SeaTalk NG 80
Connections 64
  Accessory 85
  Bare-ended wires 63
  Battery 68
  Card reader 85
  CPT-S-Series transducers 73, 76
  Distribution panel 67
  DownVision transducers 73, 76
  Ethernet 81
  External storage 85
  Internet 82–83
  Network 81
  RealVision 3D transducers 72
  RealVision Max 3D transducers 72
  RNS-5 81
  Traditional transducers 73, 76
  Transducer 72–73, 76
  USB (via RCR-SDUSB) 85
  Wi-Fi 83
  Wire 63
Connectors 64
Cybersecurity 12

D

Declaration of Conformity 12
Dedicated grounding 69
Diagnostics 104
Dimensions 35–37
  Axiom 12" flush mount 37
  Axiom 12" surface mount 37
  Axiom 12" trunnion mount 36
  Axiom 7" flush mount 35
  Axiom 7" surface mount 35
  Axiom 7" trunnion mount 35
  Axiom 9" flush mount 37
  Axiom 9" surface mount 37
  Axiom 9" trunnion mount 36

E

e-Label 11
Electromagnetic Compatibility 39
EMC, *See* Electromagnetic Compatibility
eS Series 129

Ethernet 130
Ethernet connection 81
External storage 85

F

Factory reset 95
Flush mounting 57
  Installation methods 57
  Mounting surface preparation 56
  Rear mounting kit 59
  Trunnion adapter 58
Fuse rating 66
Fuse requirement 33

G

gS Series 129

I

Inline fuse 33
Installation 50, 57
  Best practice 68
  Flush mounting
    Installation methods 57
    Mounting surface preparation 56
    Rear mounting kit 59
    Tools required 56
    Trunnion adapter 58
  Mounting options 45
  Surface mounting
    Installation methods 51
    Mounting surface preparation 50
    Rear mounting kit 53
    Tools required 50
    Trunnion adapter 52
  Trunnion mounting 48
    Parts required 47
    Tools required 47
Interference 40
    See also Compass safe distance
    RF 40
Internet connection 82
IP address 104
IP networking 130

L

Legacy adaptor 18
LightHouse
  Downgrade 129
  minimum version 20
LightHouse 3 18
LightHouse 4 18
Location requirements
  Display viewing angle 43
  General 39
  GNSS 40
  GPS 40
  Touchscreen 41
  Wireless 42
  Wireless interference 42

M

Maintenance 11, 88
Mounting
  Flush mounting
    Installation methods 57
    Mounting surface preparation 56
    Rear mounting kit 59
    Tools required 56
    Trunnion adapter 58
  Mounting options 45
  Surface mounting
    Installation methods 51
    Mounting surface preparation 50
    Rear mounting kit 53
    Tools required 50
    Trunnion adapter 52
  Trunnion mounting 48
    Parts required 47
    Tools required 47

Mounting options 45

N

Network
cables 122
Network connection 81
Networking (IP)
Overview 130
NMEA 2000 129
PGN list 129

O

Operation 18, 91, 129

P

Parts supplied
7" 12" 32
7" 12" (DISP) 32
7" 9" 32
7" 9" (DISP) 32
Axiom 7" 31
Axiom 7" (DISP) 31
Power
Battery connection 68
Cable extension 68
Connection to battery 68
Connection to distribution panel 67
Distribution 66
Distribution panel 67
Fuses 33
Grounding 68
Sharing a breaker 67
Power cable extension 68
Power connection 66
Power troubleshooting 94
Product information 104
Product recycling (WEEE) 14
Product support 103

R

Radio Frequency (RF) interference 40
RayNet 130
cables 121–122
RayNet connection 81
RCR-SDUSB 18
Recovery mode 95
Regulatory standards 11
Removing trunnion adaptor 51, 58
RJ45
cables 122
Routine checks 88

S

SeaTalk NG
Adaptor cables 127
Backbone cables 126
Connectors 126
Kits 124
Power cables 126
Spur cables 125
SeaTalk NG cables 124
SeaTalkhs
cables 122
Service Center 103
Servicing 11, 88
Software updates 43
Spares 119
Specification
Dimensions 35–37
Support forum 105
Suppression ferrites 86
Surface mounting 50
Installation methods 51
Mounting surface preparation 50
Rear mounting kit 53
Trunnion adapter 52
System examples 21

T

Technical specification
  Environmental 107, 111, 115
  GNSS 109, 112, 116
  GNSS receiver 109, 112, 116
  Network 112, 116
  Physical 107, 111, 115
  Product markings 11
  Storage 108, 112, 116
Technical Specification
  RealVision 3D sonar 108, 112, 116
Technical SpecificationDownVision sonar specification 108
Technical support 103, 105
Thermal breaker rating 66
Tools required
  Bracket mounting 47
  Flush mounting 56
  Surface mounting 50
  Trunnion mounting 47
Training courses 105
Transducer
  Adaptor cables 73, 76, 120
Transducer connections 64
Troubleshooting 93–94, 96, 99, 101
  GNSS 95
  GNSS (GPS) 95
  GPS 95
  Miscellaneous 94
  Power 94
  Sonar 96
  Touchscreen 101
  Wi-Fi 99
Trunnion mounting 48
Typical system 21

V

Ventilation 39

W

Warranty 14, 103
WEEE Directive 14
Wi-Fi
  Settings 83

Y

YachtSense Link
  IP address conflict 82
  Network connection 82